This document has been downloaded from:

The largest resource for amusement machines documentation on the world wide web!

FLIPPERSPILL.COM

# CIRCUS

# SERVICE MANUAL

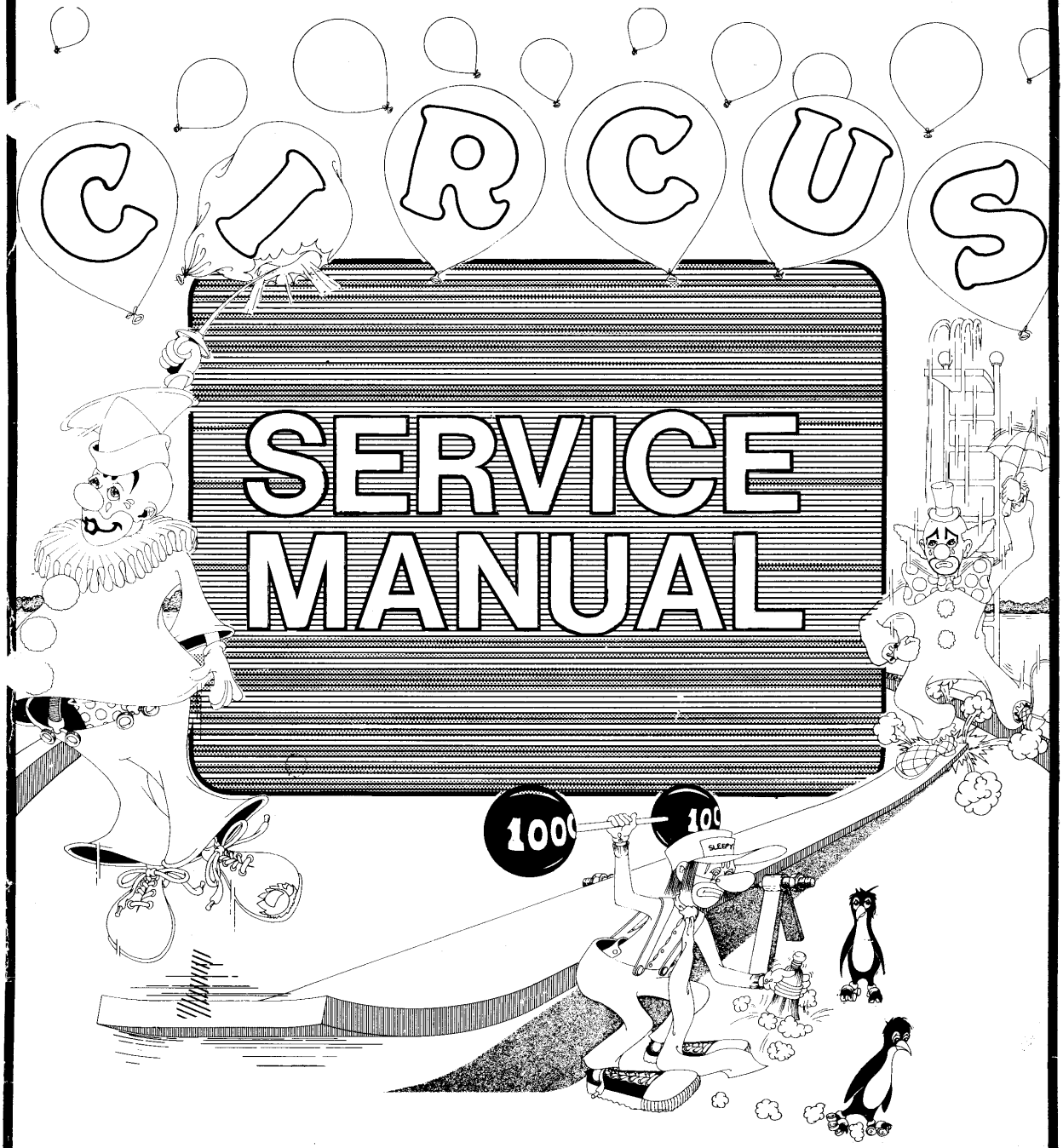


© 1977 ALL RIGHTS RESERVED BY EXIDY INC.

## TABLE OF CONTENTS


I. General Information . . . . . 1

II. Normal Operation . . . . . 2

III. Adjustments and Selectable Options . . . . . 2

IV. Audio Adjustments . . . . . 4

V. Power Supply Adjustments . . . . . 4

VI. Mechanical Assemblies . . . . . 5

VII. Technical Information . . . . . 7


## LIST OF ILLUSTRATIONS


Figure A . . . . . Monitor Display

Figure B . . . . . Audio P.C. Board Adjustments

Figure C . . . . . Power Supply Adjustments

Figure D . . . . . Control Panel

Figure E . . . . . Major Internal Components

Figure F . . . . . Logic Board Block Diagram

Figure G . . . . . Audio Board Block Diagram

Figure H . . . . . Harness Diagram

Figure I . . . . . Schematic Diagrams

## I. GENERAL

CIRCUS is a one or two player skill game which requires the player to bounce a jumping clown off the proper side of a springboard, and in turn, propel another clown to the top of the screen where he can burst three colored rows of balloons.

The higher the clown jumps, the more balloons that can be burst and the greater the score that can be obtained. Yellow balloons in the lowest row are worth twenty points each, green balloons in the middle row are worth fifty points each, and blue balloons in the top row are worth one hundred points each. In addition, there is a point bonus for eliminating all the balloons in any row. When the clown bursts the last balloon in a row, he hangs there momentarily as appropriate "award music" is played. Then he jumps back down to the springboard and the row of balloons is reset. An additional bonus of an extra "jump" is provided the player whenever he bursts the entire top row of blue balloons.

CIRCUS can be adjusted for 3, 5, 7, or 9 "jumps" per game. As long as the clowns continue bouncing off the springboard, points are accumulated. However, the speed of the jumping clowns increase, thereby testing the skill of the player. If the clown misses the board, he tumbles and falls, and appropriate music is played.

Multiple coinage options are available on CIRCUS, and full game instructions are displayed on the screen after the player inserts his coin. The day's high score is flashed on the screen, and an optional "top this score" feature can be used, which awards a replay to the player who beats the day's high score.

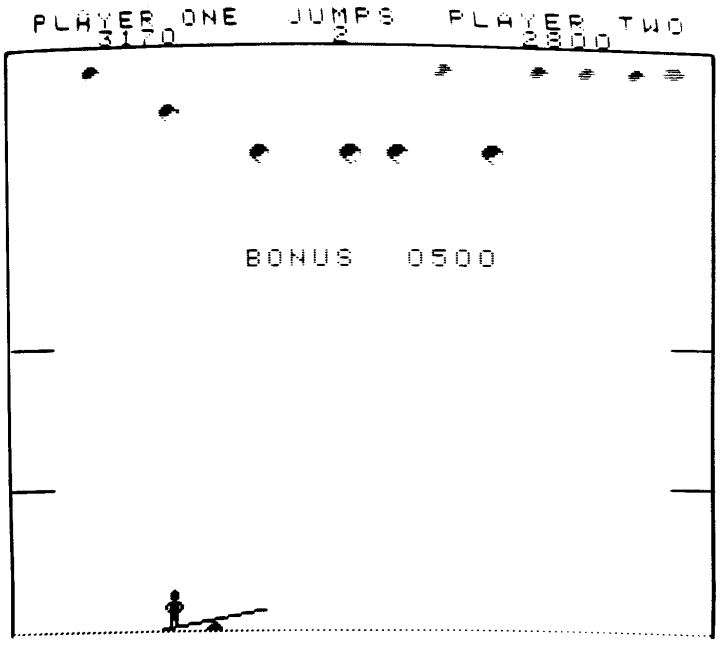


MONITOR DISPLAY
(FIGURE A)

## II. NORMAL OPERATION

### Attract Mode

When power is initially applied, the words "GAME OVER" should be flashing on the screen. Also on the screen will be "TODAY'S HIGH SCORE" followed by a score which will change with each new higher score attained throughout the day. If power is removed from the game, however, this high score will be reset to zero.

Also displayed on the screen, at the operator's selection, will be one of the following:

Two Player – 1 Coin
or
One Player – 1 Coin
Two Player – 2 Coin
or
One Player – 2 Coin
Two Player – 4 Coin

CIRCUS also has a credit counter so that one can "rack-up" a number of games in advance, as is common on mechanical pinball games.

While the game is in the ATTRACT MODE (no credits, no game in progress) the game plays automatically, as if a player were moving the springboard control. This allows the player to observe normal play of the game prior to inserting a coin.

### Introduction Mode

When a coin is deposited by a player, the following message will be written on the screen:

"MOVE EMPTY SIDE OF
SPRINGBOARD UNDER MAN
FOR CONTINUED PLAY
POP ALL BLUE BALLOONS
FOR BONUS JUMP"

"CREDITS N"

(N = A variable number representing the number of games stored up in advance by insertion of coins.)

"TOP THIS SCORE FOR CREDIT"

"N"

(N = A random variable number which, if matched or exceeded by player's score, will award one extra game credit.)

### Game Play

When the start button is depressed (after a coin or coins are inserted), a fanfare tune alerts the player that the game has begun.

The number of jumps (or turns) per player will be indicated in the top center of the screen at this time. This number is operator selectable to 3, 5, 7, or 9.

Upon completion of the fanfare tune, the clown will walk out on a platform, jump off toward the bottom of the screen, and the player will then have control of the springboard in order to position it horizontally underneath the clown. The empty side of the springboard must be placed under the clown so that he will bounce the other clown upward to pop balloons.

If the clown hits the side boundaries or jumping platforms, he will somersault through the air, landing upright each time, so that he may be bounced upward by the springboard.

When the clown hits the bottom boundary, he flattens out and appropriate music tells the player he has lost one turn. In a two-player game, this is the time to change players.

### Awards

| Color of Balloon Row | Balloon Point Value | Single Row Bonus Point Value |
|---|---|---|
| Yellow | 20 each | 200 |
| Green | 50 each | 500 |
| Blue | 100 each | 1000 |

SUPER BONUS awards 10,000 points.

## III. SELECTABLE OPTIONS

There are four (4) switch selectable options on CIRCUS. These are controlled by a seven segment DIP switch located on the main logic board in position 14A. (See Figure D, item 8.) This switch is accessible from the front of the game through the coin door.

Following are the options and the instructions for their selection:

| A. Coinage | Switch 4 | Switch 5 |
|---|---|---|
| 2 Player – 1 coin | off | off |
| 1 Player – 1 coin<br>2 Player – 2 coin | on | off |
| 1 Player – 2 coin<br>2 Player – 4 coin | off | on |

B.

| Jumps (Turns) | Switch 6 | Switch 7 |
|---|---|---|
| 3 Jumps | on | on |
| 5 Jumps | on | off |
| 7 Jumps | off | on |
| 9 Jumps | off | off |

C.

| "TOP THIS SCORE" | Switch 3 |
|---|---|
| Credit awarded for topping score | off |
| Credit *not* awarded for topping score | on |

D. **Bonus**

There are two (2) bonus modes in CIRCUS. The "single row" bonus mode awards a bonus for popping all the balloons in any single row. The row then resets (new balloons appear). Each row awards a different value bonus (see "Awards" below for points awarded). The "super bonus" mode awards a bonus only for popping *all* the balloons on the screen.

Selection is as follows:

| | Switch 2 |
|---|---|
| Single Row Bonus | on |
| Super Bonus | off |

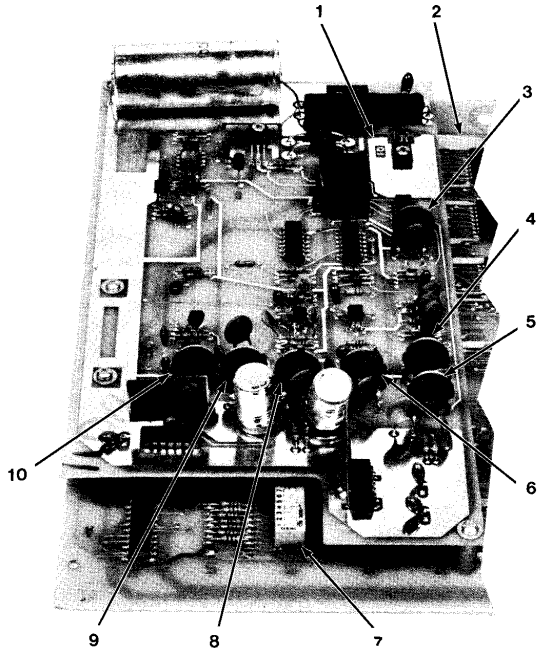


AUDIO P.C. BOARD
(FIGURE B)

1. AUDIO P.C. BOARD
2. MICRO PROCESSOR P.C. BOARD
3. R63 VOLUME – MUSIC
4. R60 LOW FREQUENCY VOLUME ADJUSTMENT – BOUNCE
5. R65 MASTER TONE
6. R29 VOLUME – POP
7. SEVEN SEGMENT DIP SWITCH
8. R39 HIGH FREQUENCY VOLUME ADJUSTMENT – BOUNCE
9. R49 VOLUME – MISS
10. R47 FREQUENCY ADJUSTMENT – MISS

## IV. AUDIO ADJUSTMENTS (See Figure B)

| | |
|---|---|
| BOUNCE | – 2 pots:<br>R60 = Low frequency volume adjustment<br>R39 = High frequency volume adjustment |
| POP | – 1 pot:<br>R29 = volume |
| MISS | – 2 pots:<br>R47 = Frequency adjustment<br>R49 = Volume |
| MUSIC | – 1 pot:<br>R63 = Volume |
| MASTER TONE | – 1 pot:<br>R65 |

## V. POWER SUPPLY ADJUSTMENTS

**Power Supply Adjustment**

1. Connect the voltmeter leads to +5 and ground traces on the main logic board.
2. Adjust the power supply "adjust potentiometer" located on the back of the monitor (Item 2 in Figure C) for +5.0VDC ± .1VDC.

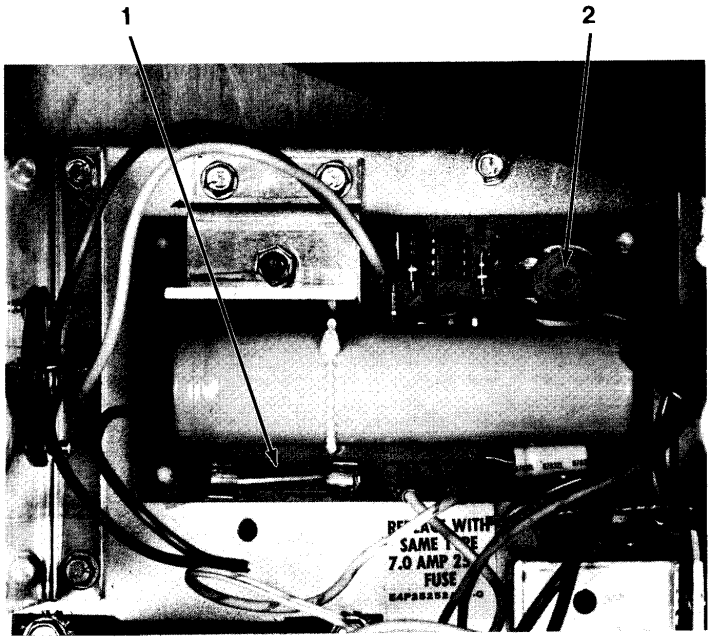


POWER SUPPLY ADJUSTMENTS
(FIGURE C)

1. 5 VOLT LOGIC SUPPLY FUSE (7 amp)
2. 5 VOLT LOGIC SUPPLY ADJUSTMENT POTENTIOMETER

## VI. MECHANICAL ASSEMBLIES

CIRCUS Control Panel (Figure D)

Design: The CIRCUS control panel is a single metal plate with four welded studs for mounting. One potentiometer and two push button switches are panel mounted and connected to the harness with fast on terminals.

Procedure: To service controls:

1. Open front double coindoor
2. Reaching up through the coindoor, remove the wing nuts from the four welded corner studs that hold the control panel down.
3. Lift the control panel up from the cabinet and set it on edge for bottom access.
4. Check all terminal connections to switches and potentiometer.

To retouch control panel finish:

The CIRCUS control panel is a steel panel coated with a flat black enamel (Sherwin Williams Polane Black). This allows the panel to be touched up with a black spray paint.

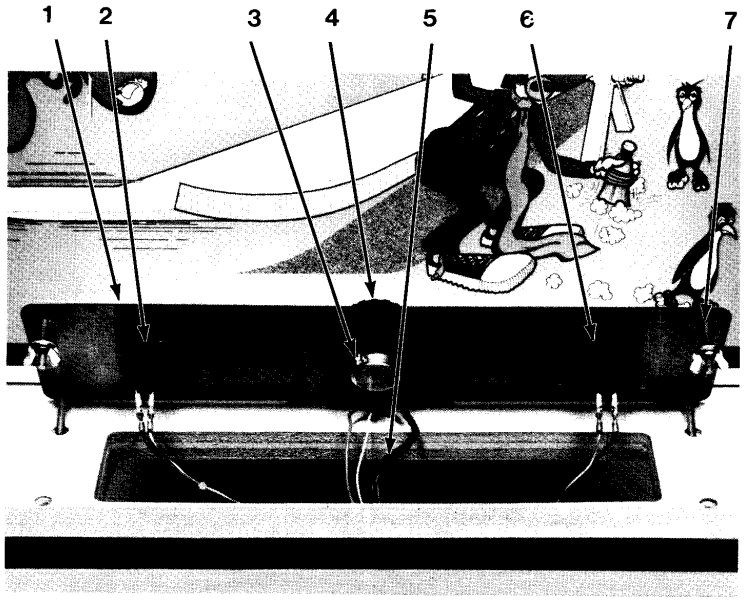


CONTROL PANEL
(FIGURE D)

1. STEEL PANEL
2. ONE PLAYER SWITCH
3. POTENTIOMETER
4. KNOB
5. CONTROL HARNESS
6. TWO PLAYER SWITCH
7. WELDED CORNER STUD WITH WING NUT

**To Remove Monitor**

1. Disconnect power cord from AC outlet.
2. Open and remove back door.
3. Remove connector from monitor.
4. Remove four bolts from monitor chassis flange mounts.
5. Lift monitor up and slide monitor out of the cabinet.

**To Remove Logic Printed Circuit Board**

1. Disconnect power cord from AC outlet.
2. Open and remove back door.
3. Clip logic PCB tie wrap at locations 5 and 13.
4. Disconnect edge connector (Item 6) from logic PCB.
5. Slide logic PCB out of rack.

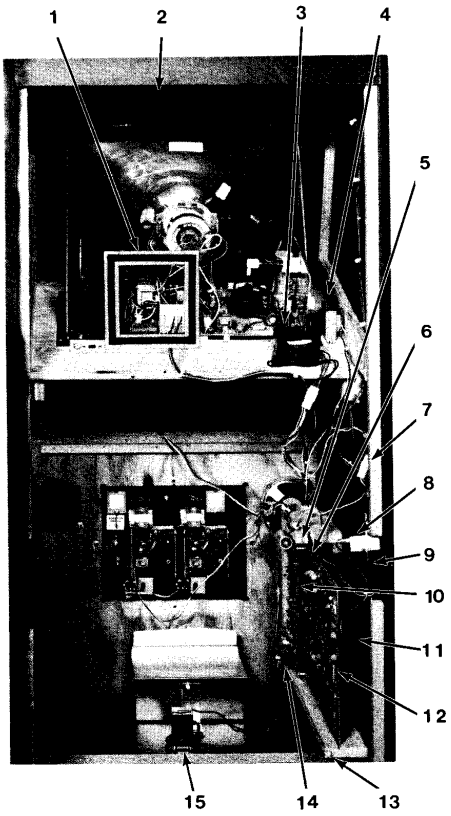


MAJOR INTERNAL COMPONENTS
(FIGURE E)

1. MONITOR POWER SUPPLY (see Figure C detail)
2. LOGO LIGHT HARNESS
3. AUDIO POWER SUPPLY TRANSFORMER
4. LIGHT HARNESS POWER SUPPLY TRANSFORMER
5. MICROPROCESSOR TIE WRAP (1 of 2)
6. MICROPROCESSOR CONNECTOR
7. MAIN HARNESS CONNECTOR
8. AC INTERLOCK SWITCH
9. AC POWER CORD
10. AUDIO PCB
11. IN LINE 5 AMP FUSE
12. MICROPROCESSOR PCB
13. MICROPROCESSOR TIE WRAP (2 of 2)
14. MICROPROCESSOR OPTION SELECTION SWITCH LOCATION
15. COIN COUNTER

## VII. TECHNICAL INFORMATION

### Logic Description and Operation

CIRCUS is a microcomputer game which uses the 6502 central processor unit. (For more information on this processor, refer to MOS Technology publication #6500-10A, MCS 6500 Microcomputer Family Hardware Manual.)

This processor is unique in that it does not have a separate Input/Output structure, rather it treats all I/O as if it were an area of memory. Memory is mapped as follows:

| | |
|---|---|
| FFF8-FFFF | Interrupt and reset vectors |
| F000-FFF8 | Program storage (PROM) |
| D000 | Paddle position and Interrupt reset |
| C000 | Option Switches (Input) |
| A000 | Control Switches (Input) |
| 8000 | Clown rotation and audio control bits (Outputs) |
| 4000-43FF | Screen RAM |
| 3000 | Clown horizontal position (Controls) |
| 2000 | Clown vertical position (Controls) |
| 1000-1FFF | Program storage (PROM) |
| 0100-01FF | Stack RAM |
| 0000-00FF | Base page RAM |

**Page 0 RAM** is used for storage of dynamic variables during program execution. **Page 1 RAM** is used by the processor as a "stack" to store return addresses and important data during subrouting execution. The **program storage** PROM, is where the program that controls the operation of the game is stored.

The **Screen RAM** consists of 1024 bytes (8-bit words) of read/write memory which, when not being addressed by the processor, is scanned by main timing to display a matrix of 32 x 32 squares on the screen. The data stored in the screen RAM is then used to select one of 256, 8-element wide by 8-line tall images in the **Screen ROM**. (Note that the screen ROM is not directly addressable by the processor.) These 8 x 8 bit blocks then form images or portions of images to be displayed on the screen. (An alphanumeric character takes one block to be displayed, where an image, such as the man standing on the seesaw takes 15 blocks.) Example: to store the letter "X" in the upper left-hand corner of the screen, the processor would write a 29H in location 4000 H. Then by combining the 256 different portions of images, a large combination of different images can be produced.

The same circuitry that generated Sync and scans the screen RAM is also used to generate the horizontal and vertical solid and dotted lines which form the box around the video and the diving boards.

The clown is generated by two sets of counters (Horizontal and Vertical) which are used to position the clown on the screen. The outputs of the counters, along with the rotation information on the output port, are fed to the **clown PROM** to form the clown image. The processor controls the clown by preloading the counters to the desired position during Vertical sync.

The processor reads data from the switches by gating the data from the control or option switches onto the data bus when the appropriate address is selected.

The paddle position is an analog to digital convertor, which is read by the processor to determine paddle horizontal position.

**AUDIO Description and Operation** (Refer to Schematic and Block Diagram)

The audio board is powered both by +5VDC from the television monitor and +15VDC developed on the audio board. AC power used to develop this +15VDC is supplied by an external transformer whose purpose is to step down the 115VAC to a more usable voltage.

The audio board contains the following circuits:

- +15VDC power supply
- audio amplifier
- white noise generator
- bounce sound generator
- pop sound generator
- miss sound generator
- music input
- video inversion driver

Following are brief descriptions of the operations of these circuits.

### The +15 VDC Power Supply

The first stage of the +15VDC power supply is a full wave rectifier, which converts the input 35VAC (center-tapped) into approximately +25VDC. This latter DC voltage is not critical, however, and may vary from board to board or transformer to transformer.

The second stage is a self-contained 3-lead regulator chip (LM340T-15 or equivalent) which converts the +25VDC into +15VDC. This +15VDC source feeds most audio circuits, and the base of pass transistor Q1. This source is a relatively low current supply, so pass transistor Q1 provides a higher current +15VDC supply to the audio amplifier chips (LM380N or equivalent). Transistor Q1 is configured as an emitter follower, so the emitter voltage will "follow" the regulated **+15VDC on**

the base (minus approximately .7VDC, which is the normal drop across the base-emitter junction in a silicon transistor operating at or near saturation).

**The Bounce Sound Generator**

The bounce sound is triggered by a negative-going TTL pulse from the logic board. The circuit comprises two phase shift oscillators, one tuned to oscillate at a lower frequency than the other. The transistor in both oscillators (Q7, Q12) under normal conditions receives no base current and the circuit is, therefore, unable to oscillate.

Notice, for example, the oscillator in which Q12 is the active element. The base of Q12 has no current path toward a positive voltage, since the anode of CR17 is pulled to ground by an open collector gate.

When signal 5 BOUNCE drives the input of the gate low, the output is allowed to swing high, forward biasing diode CR17, and creating a current path through R62 to +5VDC. This turns on the oscillator and charges up capacitor C31. When signal 5 BOUNCE disappears, diode CR17 once more becomes reverse-biased, shutting off the current path. In this condition, since C31 is still charged, Q12 has base current for a period determined by the RC combination C31, R53.

Note that the input diodes (CR17, CR10) for both oscillators have a common anode. Both circuits operate identically and simultaneously, but due to the fact that the RC combination for each oscillator is different, one (the low frequency oscillator) remains on longer than the other after the input signal has been removed.

Diodes CR11, CR18 provide output isolation, while allowing the signals to pass on to volume pots and then to the audio input buss.

**The Pop Sound Generator**

The Pop Sound is triggered by a negative going TTL pulse from the logic board. The Pop Sound Generator input structure is much the same as that of the Bounce Sound Generator described above, in that transistor Q6 receives no base current until the incoming signal 5 POP forward biases diode CR7, creating a base current path toward +15VDC, and simultaneously charging capacitor C15. When the input signal is removed, diode CR7 becomes once more reverse-biased, leaving a charged up C15 to keep the circuit on for a period determined by the RC combination of C15, R24.

This circuit, however, does not oscillate. It merely amplifies the white noise previously generated. Thus, it is like an "amplifying switch" with a small turn-off delay. A diode in the collector of Q6 provides output isolation as in the Bounce Sound Generator circuit.

**The Miss Sound Generator**

The Miss Sound is enabled by a TTL low level input from the logic board. This generator consists of a voltage controlled oscillator (used as a tone generator) and an amplitude modulator used to "shape" the sound volume.

Under normal conditions (no input present) transistor Q11 operates in a saturated condition, thus holding U4 pin 5 (the input to the VC)) at a relatively low voltage, and U5 pin 2 (the control input to the amplitude modulator) at a relatively high voltage. This voltage at U5 pin 2 holds the output in an "off" condition.

Note that one end of a 68K resistor is tied to the base of Q11, and the other end is tied to the output of an open-collector gate. Given a TTL low level on the input of this gate, the output drives toward ground, thus making the 68K resistor effectively the bottom part of a resistor divider on the base of Q11. This would immediately rob Q11 of its base current (most of it) and the collector voltage would immediately rise, if it were not for the 6.8$\mu$f capacitor placed in the upper half of the divider. This capacitor takes some time to discharge, and thus the collector voltage makes a leisurely transition upward. This makes the VCO change gradually from a high to a low frequency output. Since the emitter voltage is the amplitude control input, this also enables the output of the amplitude modulator in the same manner (except in the case of the amplitude modulator a descending voltage increases the output **amplitude**).

The duration of the input signal 5 MISS determines the duration of the Miss Sound directly. The output is fed directly to the audio input buss.

**The Music Input**

The music is generated entirely by the microprocessor on the logic board, out of software. The input on the audio board simply consists of an isolation and volume control network, prior to passing the signal along to the audio input buss.

**The Video Inversion Driver**

This circuit is for use only with cocktail table models, wherein the television display must be "turned over" in order for players on both sides of the table to see an upright picture when it is their turn to play. It consists of a single D type flip-flop used to drive a transistor (MJE182). When this transistor is turned on the collector drives toward ground, thus supplying the yoke relay with the ground it needs to energize and reverse the yoke leads in the television monitor.

The flip-flop (U2) is set (which inverts the picture) by a negative going TTL pulse from the logic board to U2 pin 10. It is reset by a negative going TTL pulse from the logic board to U2 pin 13.

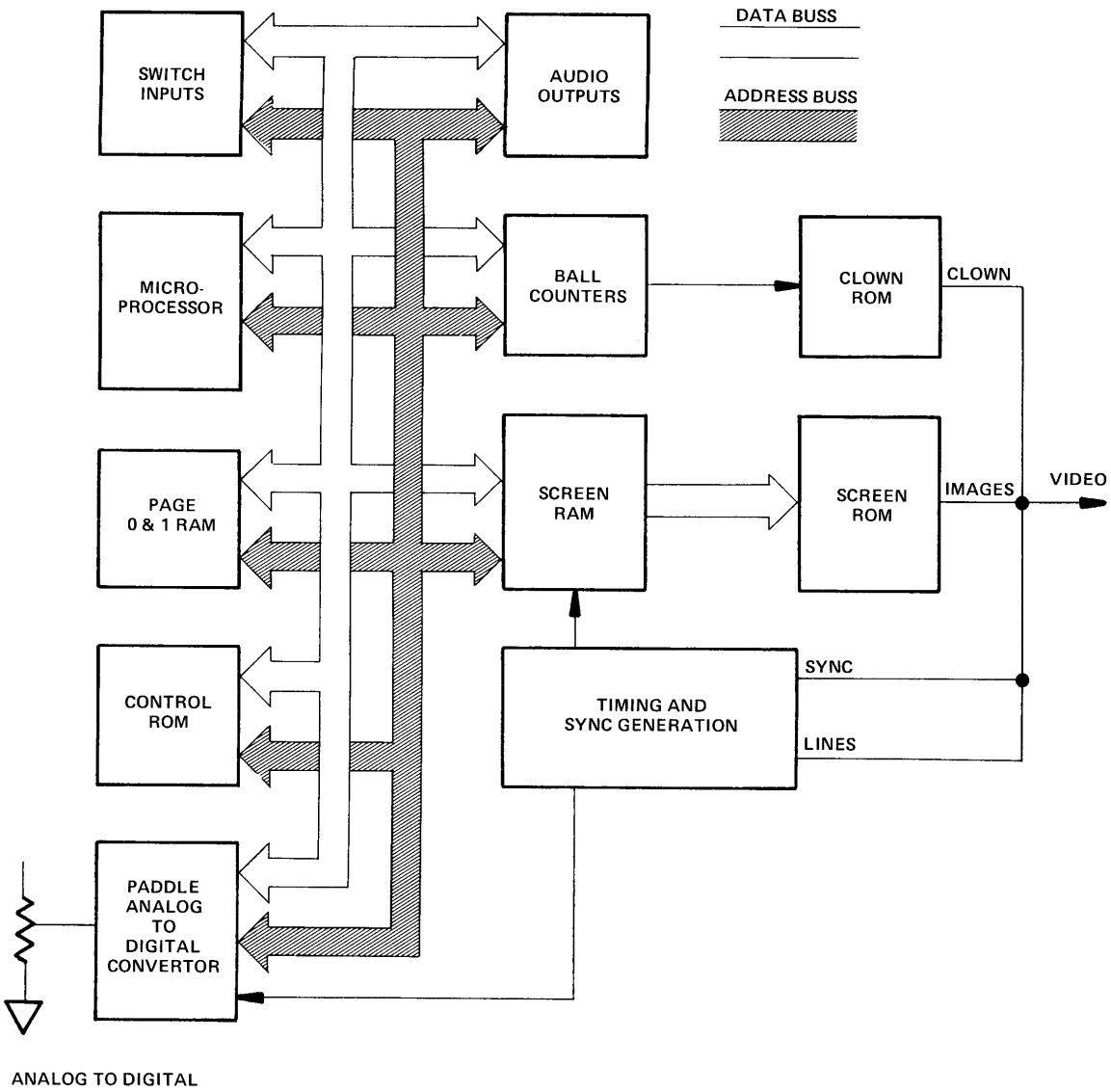


LOGIC BOARD BLOCK DIAGRAM
(FIGURE F)

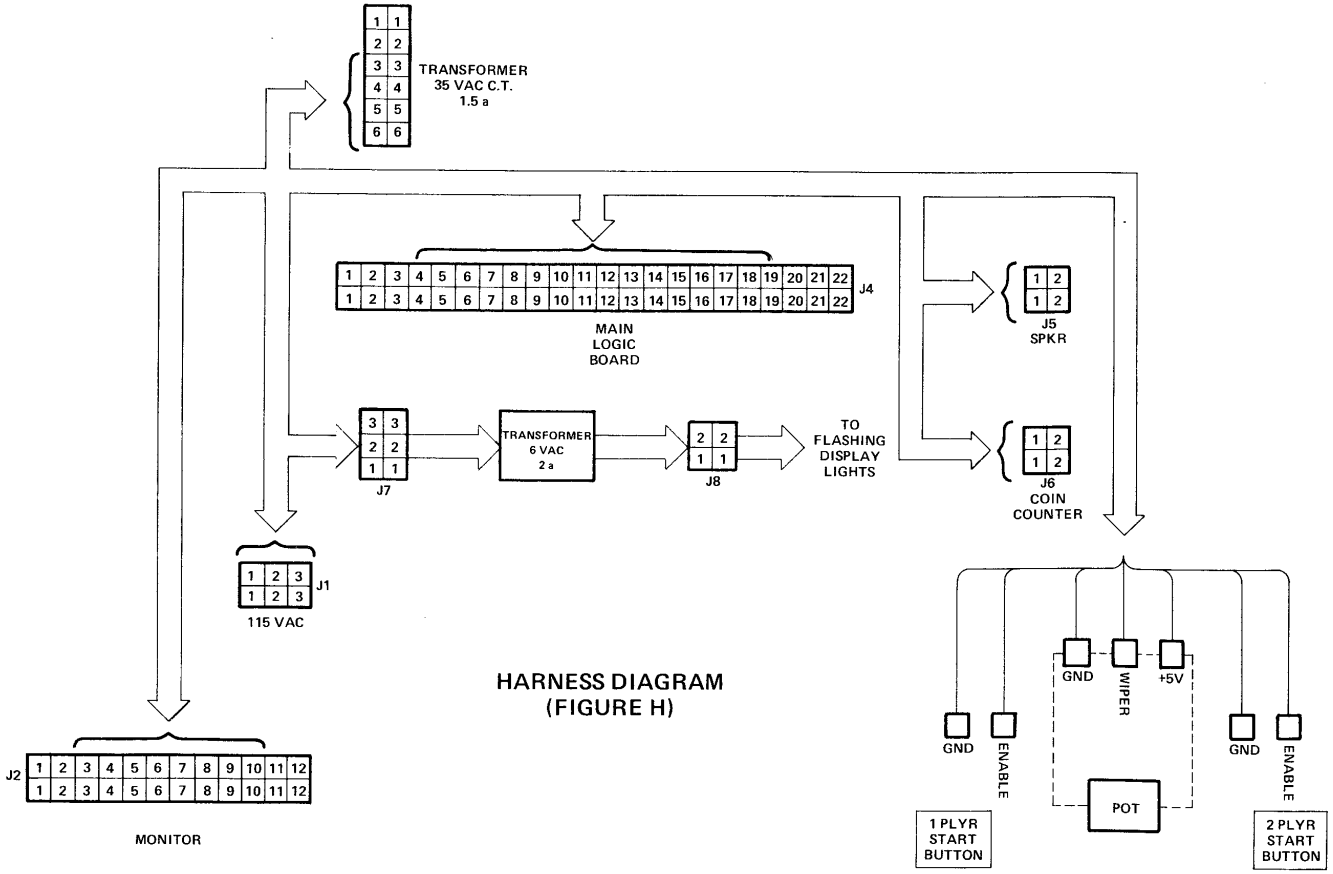


HARNESS DIAGRAM
(FIGURE H)

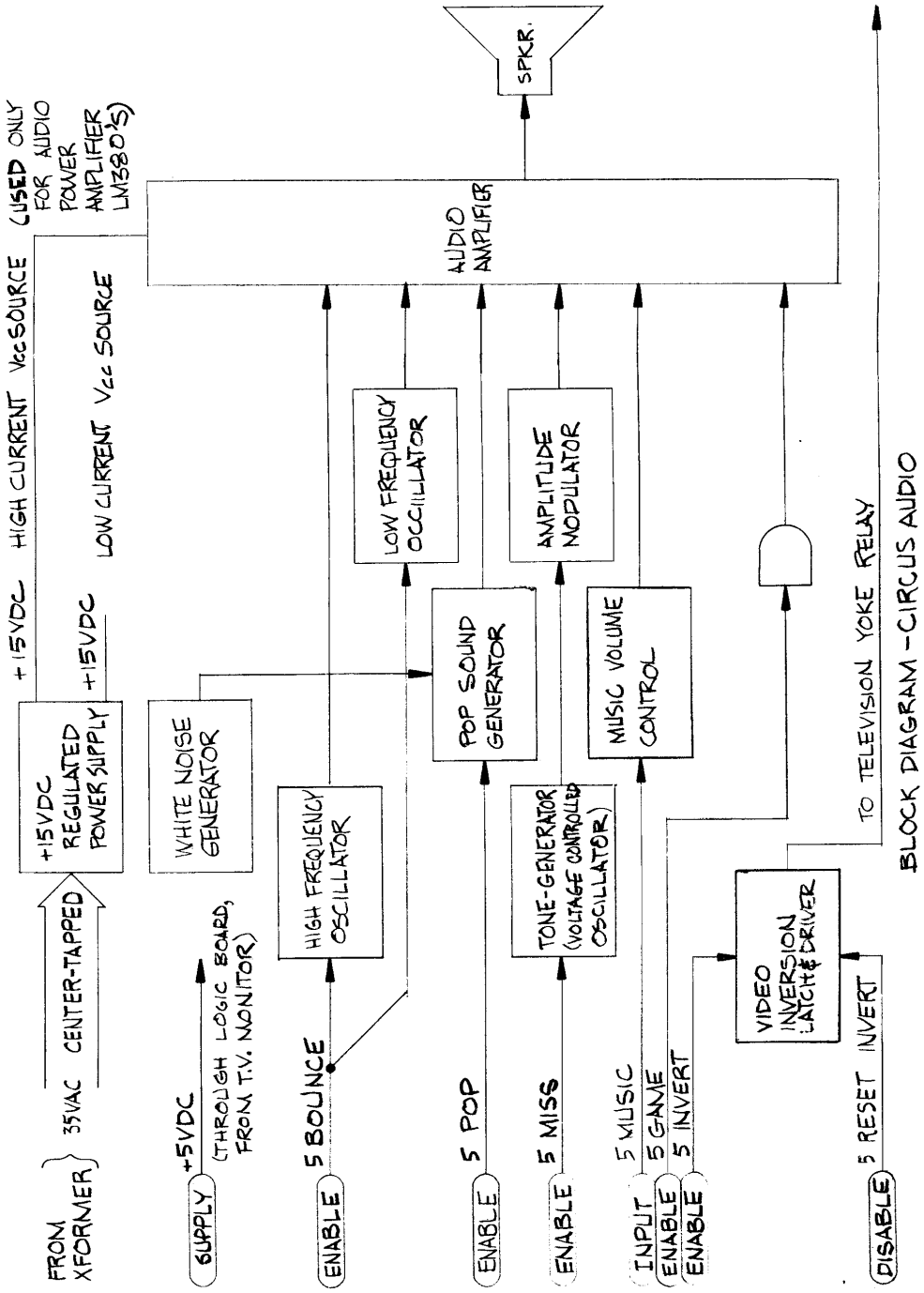


AUDIO BOARD BLOCK DIAGRAM
(FIGURE G)

## HARNESS DIAGRAM
## (FIGURE H)

| PIN | TO | AND | SIGNAL |
|---|---|---|---|
| J1-1 | J2-9 | J3-1, J7-1 | SWITCHED POWER |
| J1-2 | J2-10 | J3-2, J7-2 | POWER |
| J1-3 | J2-7 | J3-3 | POWER LINE GROUND |
| J2-1 | J4-4 | | VIDEO |
| J2-2 | J4-3 | | VIDEO RETURN |
| J2-3 | J4-2 | J6-2 | POWER SUPPLY GROUND |
| J2-5 | | | MONITOR SPKR. |
| J2-6 | J4-1 | COINC | VCC |
| J2-7 | J1-3 | | POWER LINE GROUND |
| J2-8 | | | MONITOR SPKR. |
| J2-9 | J1-1 | | SWITCHED POWER |
| J2-10 | J1-2 | | POWER |
| J2-11 | | | |
| J2-12 | | | 10.8 VDC |
| J3-1 | J1-1 | | SWITCHED POWER |
| J3-2 | J1-2 | | POWER |
| J3-3 | J1-3 | | POWER SUPPLY GROUND |
| J3-4 | J4-16 | | 35 VAC |
| J3-5 | J4-15 | | 35 VAC |
| J3-6 | J4-14 | | 35 VAC C. T. |
| J4-1 | J2-6 | | VCC |
| J4-2 | J2-3 | | GND |
| J4-3 | J2-2 | | VIDEO RETURN |
| J4-4 | J2-1 | | VIDEO |
| J4-5 | | | 1 PLYR START SWITCH |
| J4-6 | | | 2 PLYR START SWITCH |
| J4-7 | | | |
| J4-8 | | | |
| J4-9 | | | |

| PIN | TO | AND | SIGNAL |
|---|---|---|---|
| J4-10 | | | |
| J4-11 | | | |
| J4-12 | J6-1 | COINC | COIN DROP SWITCH |
| J4-13 | | | STATIC ANTENNA* |
| J4-14 | J3-6 | | 35 VAC C.T. |
| J4-15 | J3-5 | | 35 VAC |
| J4-16 | J3-4 | | 35 VAC |
| J4-17 | | | RELAY - |
| J4-18 | | | RELAY + |
| J4-19 | | | |
| J4-20 | J5-1 | | SPEAKER OUT |
| J4-21 | J5-2 | | SPEAKER OUT |
| J4-22 | | | POT. WIPER |
| J5-1 | J4-20 | | SPEAKER |
| J5-2 | J4-21 | | SPEAKER |
| J6-1 | J4-12 | COIN COUNTER | COIN DROP SWITCH |
| J6-2 | J2-3 | J7-8 | POWER SUPPLY GROUND |
| COIN COUNT | J2-6 | | VCC |
| COIN COUNT | J4-12 | | COIN DROP SWITCH |

*STATIC ANTENNA = 6" long wire bundled in with the harness — other end not connected to anything.

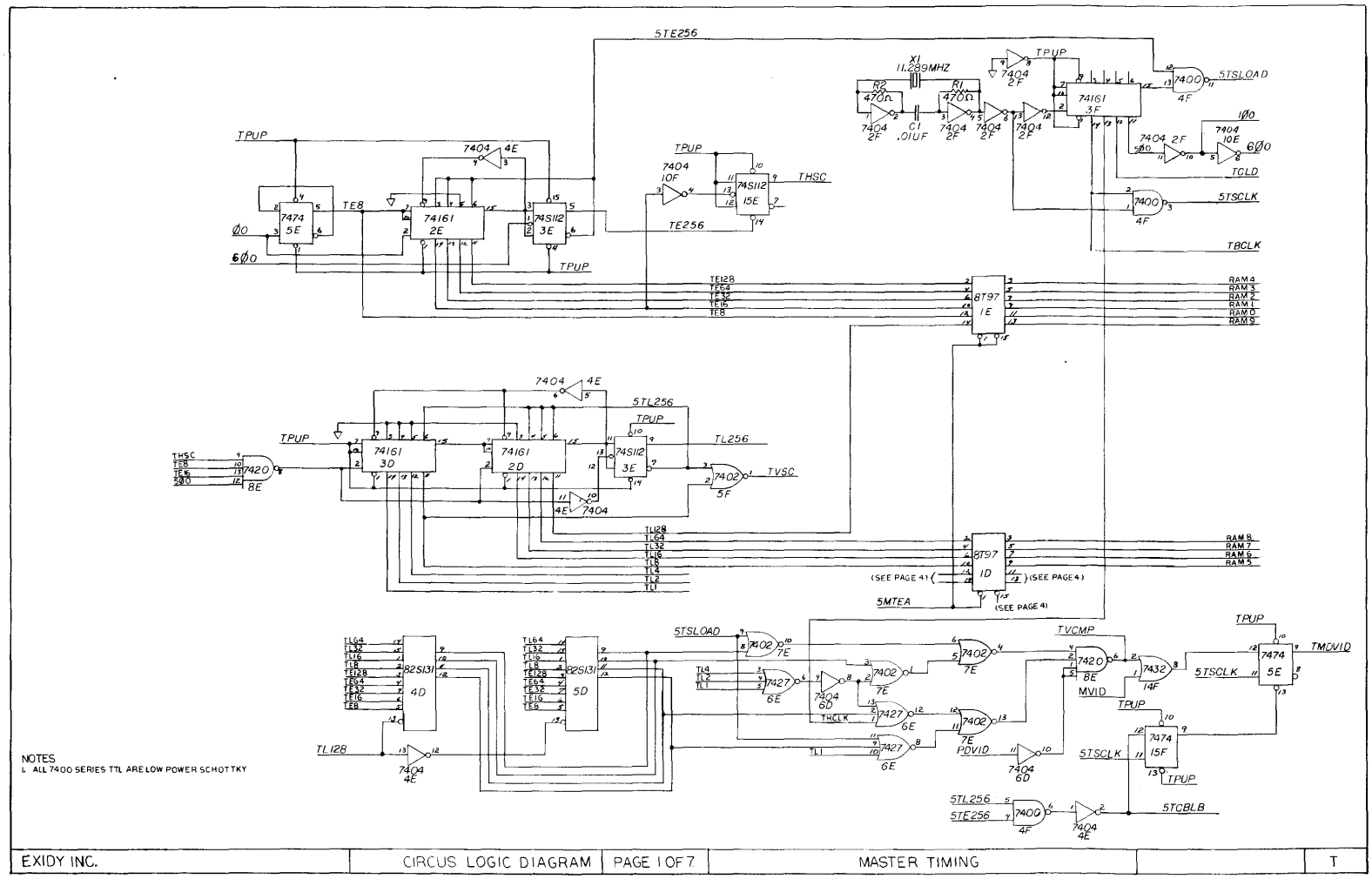


NOTES
1. ALL 7400 SERIES TTL ARE LOW POWER SCHOTTKY

| EXIDY INC. | CIRCUS LOGIC DIAGRAM | PAGE 1 OF 7 | MASTER TIMING | | T |
|---|---|---|---|---|---|

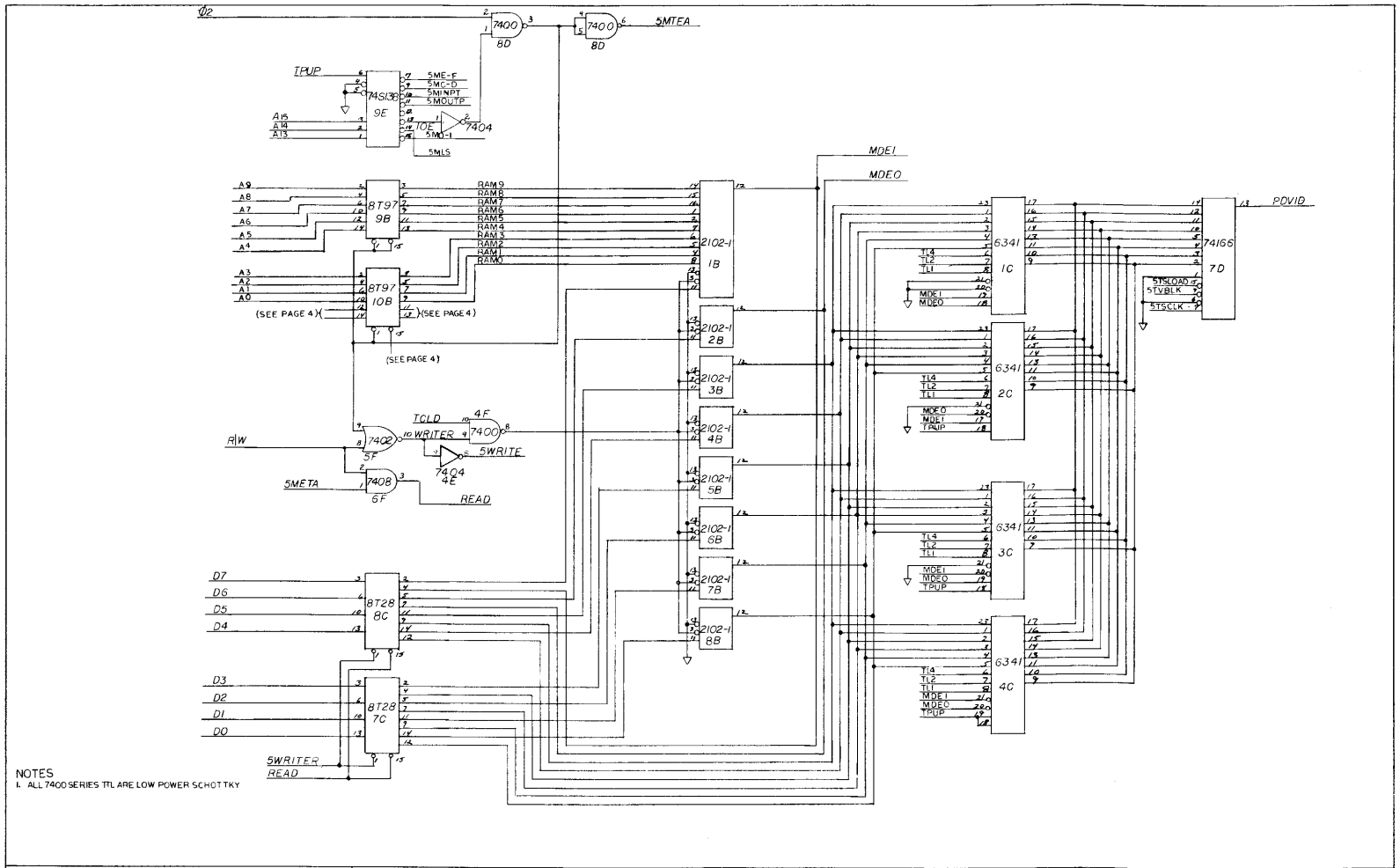


NOTES
1. ALL 7400 SERIES TTL ARE LOW POWER SCHOTTKY

| EXIDY INC. | ROBOT BOWL LOGIC DIAGRAM | PAGE 2 OF 7 | VIDEO GENERATION | | S |
|---|---|---|---|---|---|

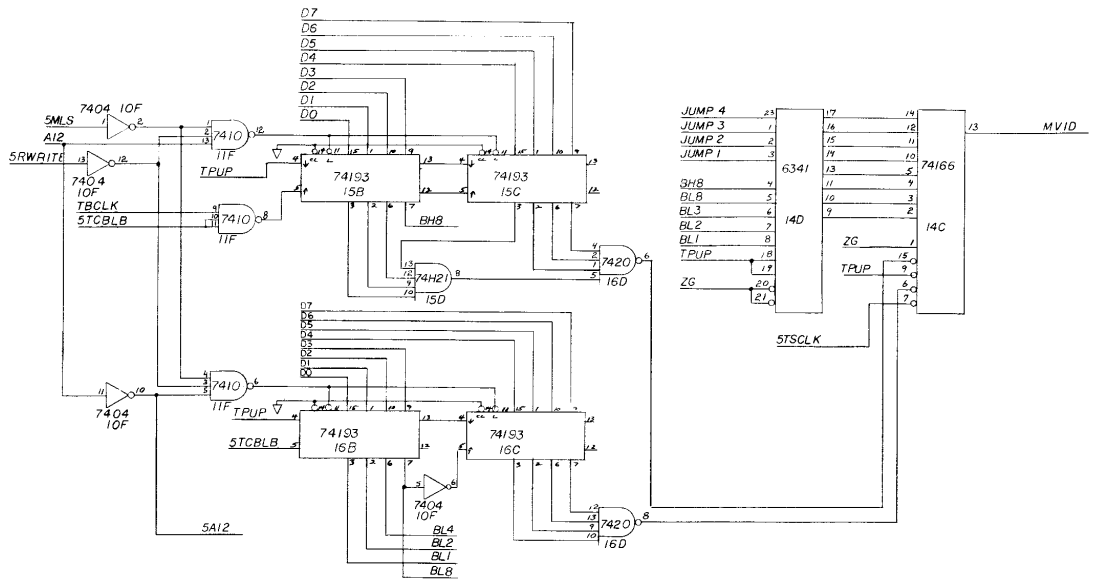


NOTES
1. ALL 7400 SERIES $T_2L$ ARE LOW POWER SCHOTTKY

| | | | | | |
|---|---|---|---|---|---|
| EXIDY INC. | CIRCUS LOGIC DIAGRAM | PAGE 3 OF 7 | MAN GENERATION | | M |

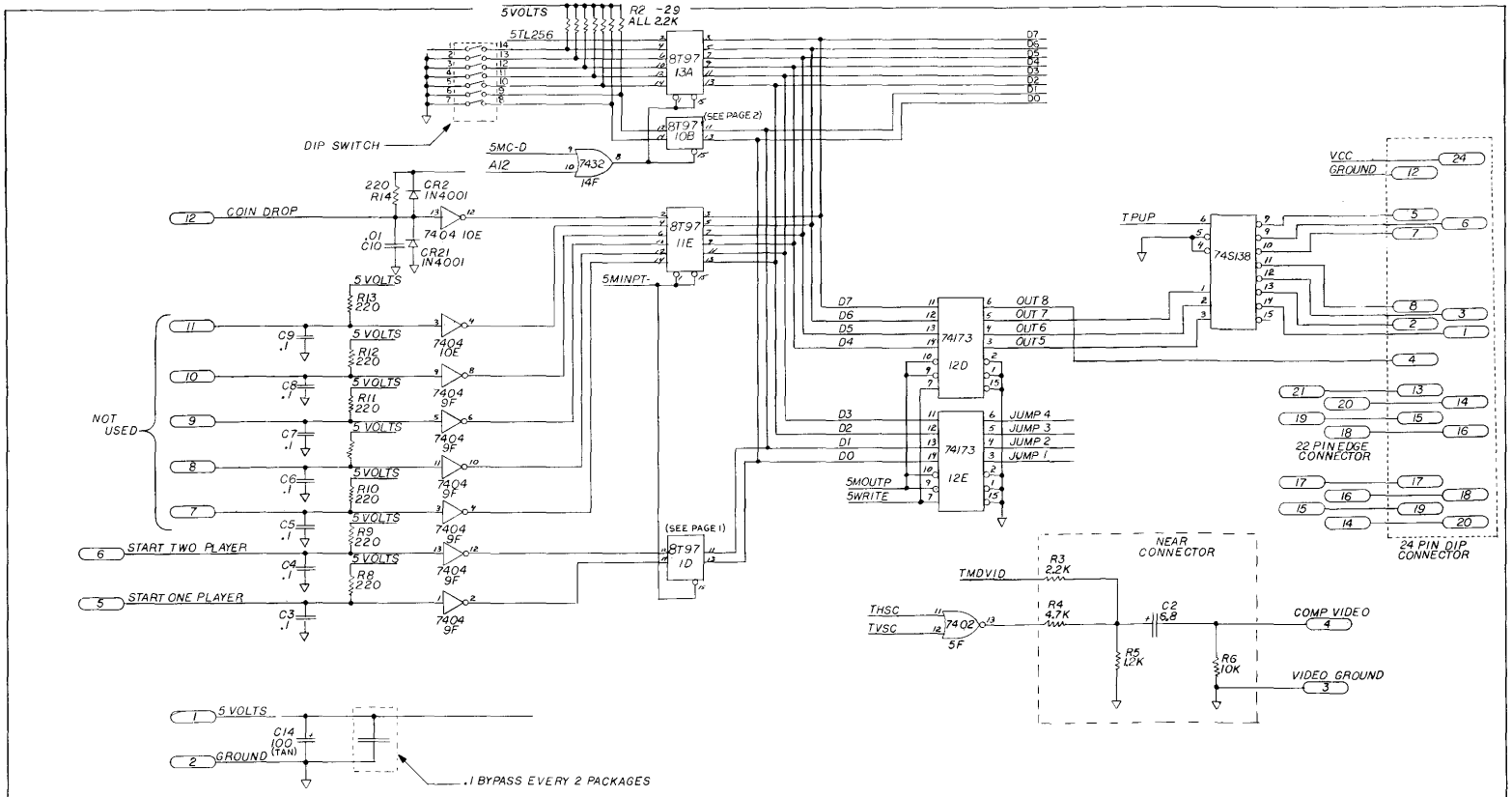


NOTES
1. ALL 7400 SERIES TTL ARL LOW POWER SCHOTTKY
2. ALL RESISTORS ARE 1/4W AND IN OHMS
3. ALL CAPACITORS ARE IN MICO FARADS

| | | | | | |
|---|---|---|---|---|---|
| EXIDY INC. | CIRCUS LOGIC DIAGRAM | PAGE 4 OF 7 | INPUT / OUTPUT | | 0 |

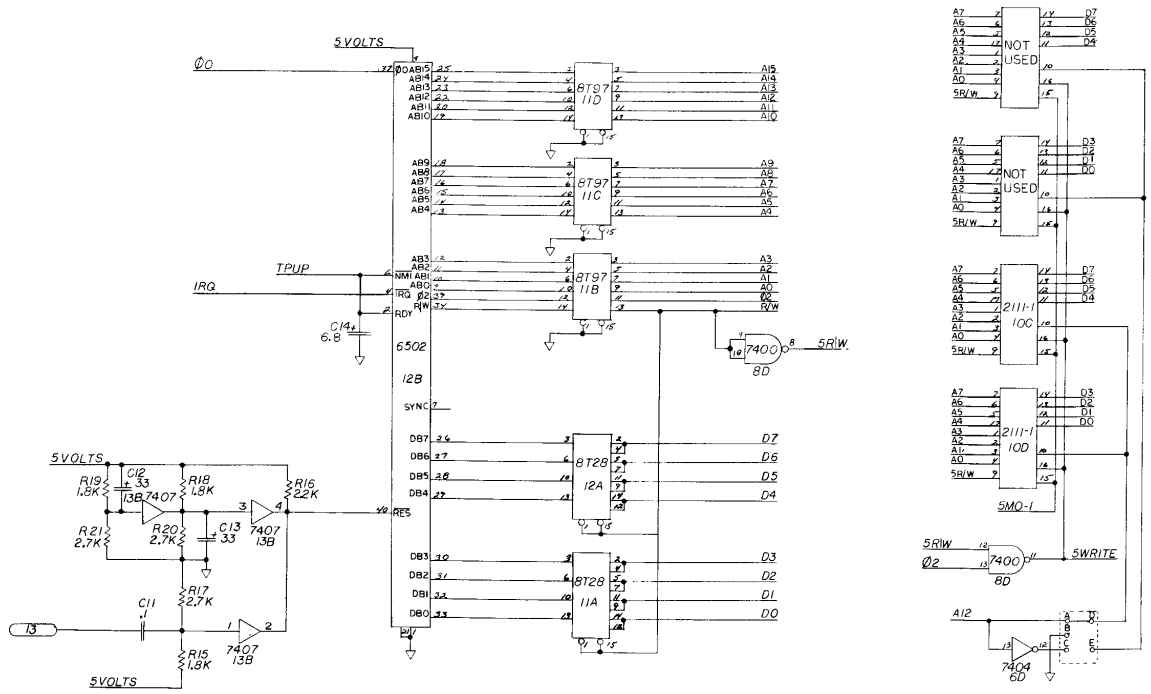


NOTES
1. ALL 7400 SERIES TTL ARE LOW POWER SCHOTTKY EXCEPT 7407
2. ALL RESISTORS ARE 1/4W AND IN OHMS
3. ALL CAPACITORS ARE IN MICRO FARADS

| EXIDY INC. | CIRCUS LOGIC DIAGRAM | PAGE 5 OF 7 | CENTRAL PROCESSING UNIT | | P |
|---|---|---|---|---|---|

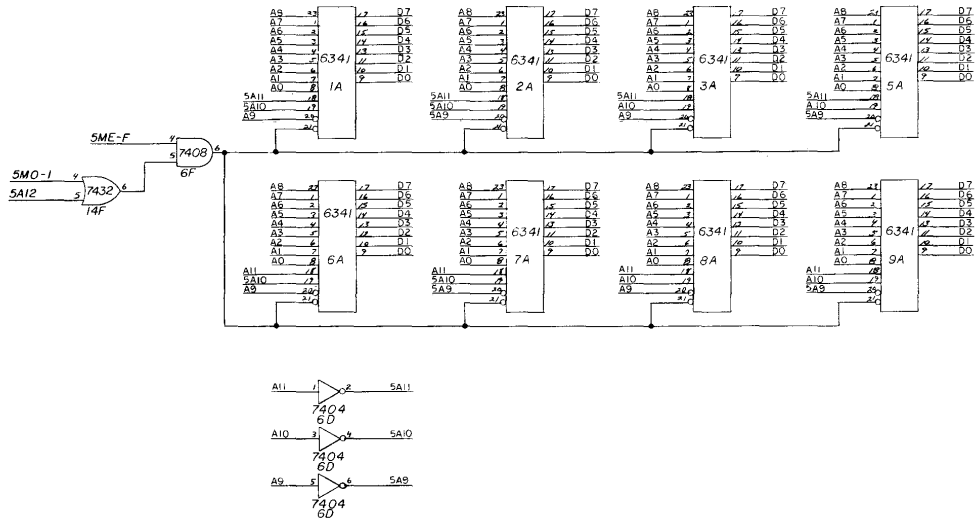


NOTES
1. ALL 7400 SERIES TTL ARE LOW POWER SCHOTTKY

| | | | | | |
|---|---|---|---|---|---|
| EXIDY INC. | CIRCUS LOGIC DIAGRAM | PAGE 6 OF 7 | READ ONLY MEMORY | | C |

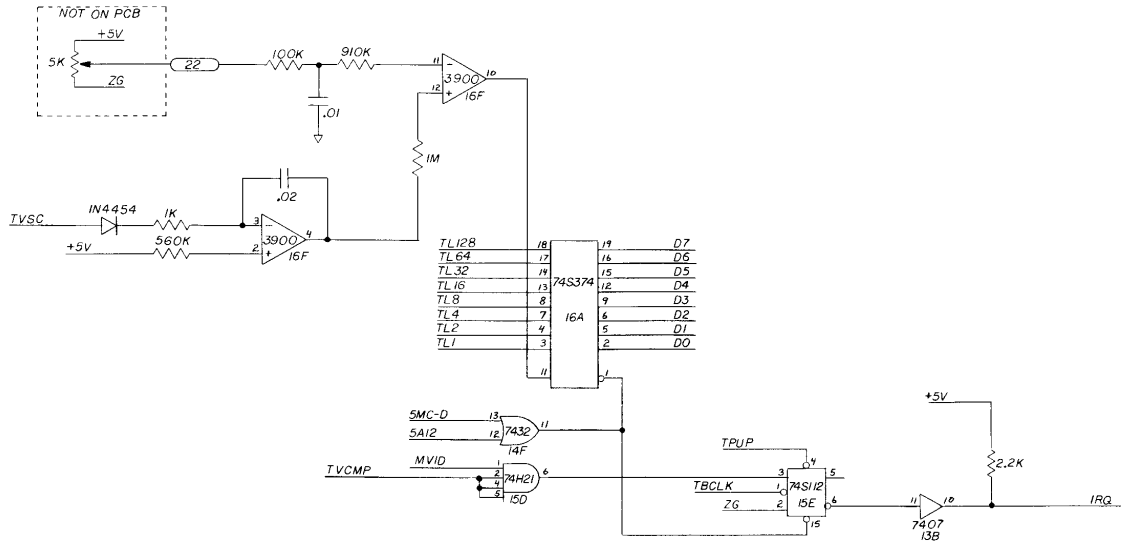


| EXIDY INC. | CIRCUS LOGIC DIAGRAM | PAGE 7OF 7 | ANALOG TO DIGITAL CONVERTER | | |
|---|---|---|---|---|---|

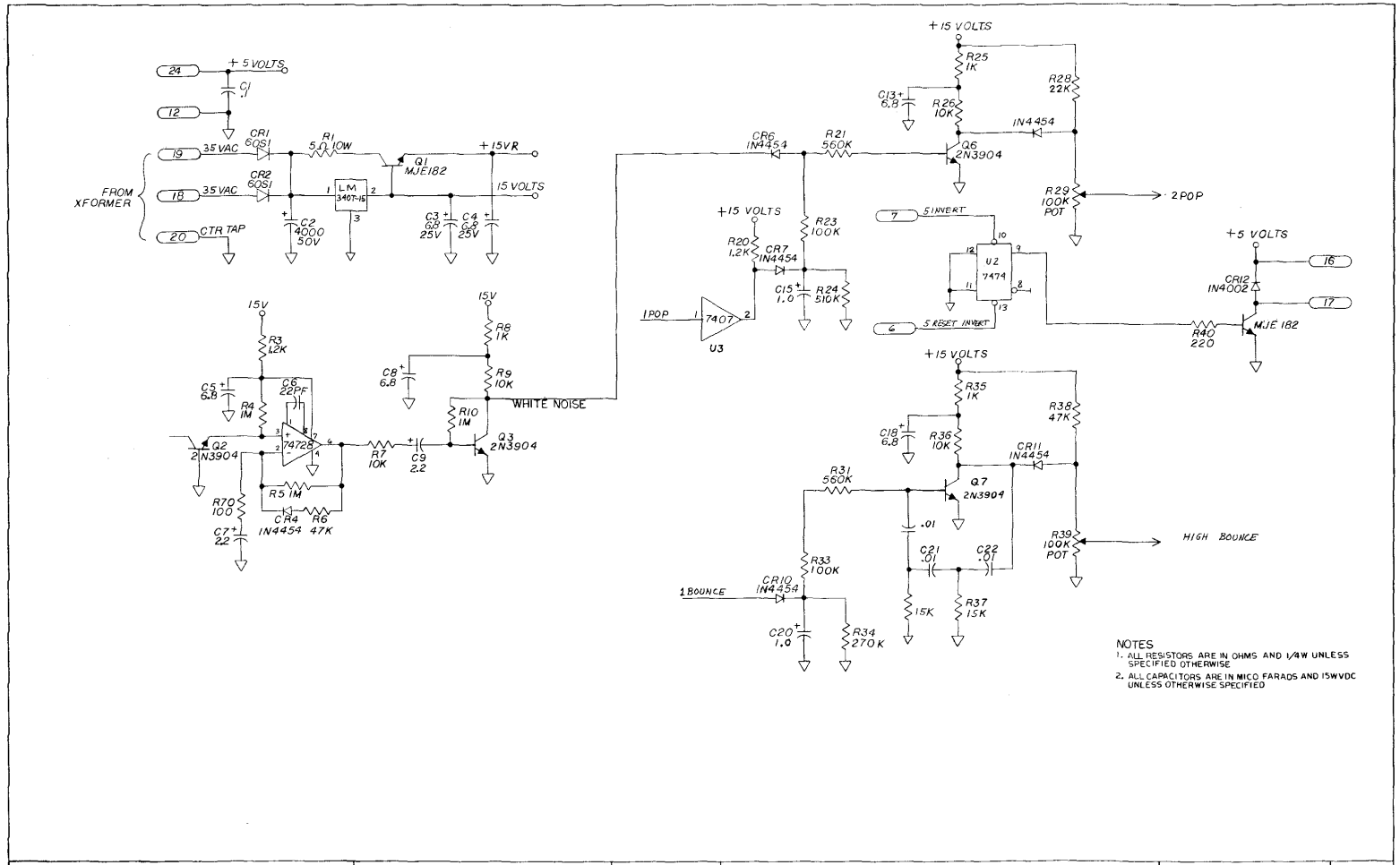


NOTES
1. ALL RESISTORS ARE IN OHMS AND 1/4W UNLESS SPECIFIED OTHERWISE
2. ALL CAPACITORS ARE IN MICO FARADS AND 15WVDC UNLESS OTHERWISE SPECIFIED

| EXIDY INC. | CIRCUS SCHEMATICS | PAGE 1OF 2 | AUDIO | | |
|---|---|---|---|---|---|

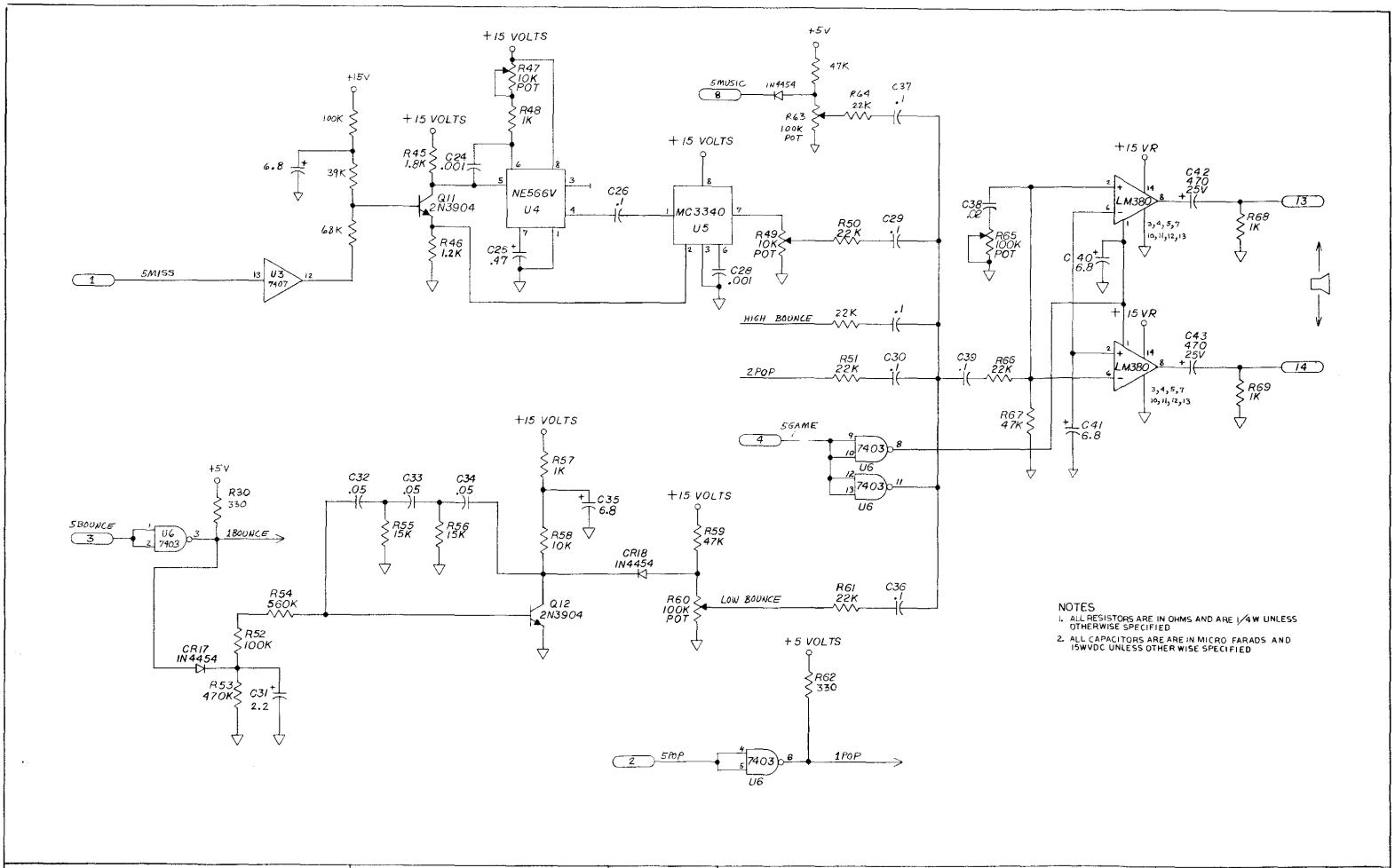


NOTES
1. ALL RESISTORS ARE IN OHMS AND ARE 1/4W UNLESS OTHERWISE SPECIFIED
2. ALL CAPACITORS ARE ARE IN MICRO FARADS AND 15WVDC UNLESS OTHER WISE SPECIFIED

| | | | | |
|---|---|---|---|---|
| EXIDY INC. | CIRCUS SCHEMATICS | PAGE 2OF2 | AUDIO | |