This document has been downloaded from:

The largest resource for amusement machines documentation on the world wide web!

FLIPPERSPILL.COM

TM-026

INDY 800

Service Information

KEE GAMES

A SUBSIDIARY OF ATARI

ATARI, INC.
14600 Winchester Blvd.
Los Gatos, CA 95030
Telephone (408) 374-2440
Telex 357-488

WARRANTY

Seller warrants that its printed circuit boards and parts thereon are free from defects in material and workmanship under normal use and service for a period of ninety (90) days from date of shipment. Seller warrants that its television monitors are free from defects in material and workmanship under normal use and service for a period of thirty (30) days from date of shipment. None of the Seller's other products or parts thereof are warranted.

If the products described in this manual fail to conform to this warranty, Seller's sole liability shall be, at its option, to repair, replace, or credit Buyer's account for such products which are returned to Seller during said warranty period, provided:

(a) Seller is promptly notified in writing upon discovery by Buyer that said products are defective;

(b) Such products are returned prepaid to Seller's plant; and

(c) Seller's examination of said products discloses to Seller's satisfaction that such alleged defects existed and were not caused by accident, misuse, neglect, alteration, improper repair, installation or improper testing.

In no event shall Seller be liable for loss of profits, loss of use, incidental or consequential damages.

EXCEPT FOR ANY EXPRESS WARRANTY SET FORTH IN A WRITTEN CONTRACT BETWEEN SELLER AND BUYER WHICH CONTRACT SUPERSEDES THE TERMS OF THIS ORDER, THIS WARRANTY IS EXPRESSED IN LIEU OF ALL OTHER WARRANTIES EXPRESSED OR IMPLIED, INCLUDING THE IMPLIED WARRANTIES OF MERCHANTABILITY AND FITNESS FOR A PARTICULAR PURPOSE, AND OF ALL OTHER OBLIGATIONS OR LIABILITIES ON THE SELLER'S PART, AND IT NEITHER ASSUMES NOR AUTHORIZES ANY OTHER PERSON TO ASSUME FOR THE SELLER ANY OTHER LIABILITIES IN CONNECTION WITH THE SALE OF PRODUCTS UNDER THIS ORDER.

Table of Contents

		Page
Warranty		Inside Front Cover
Section 1	General Maintenance Information	
1-1	Introduction	1-1
1-2	New Machine Set-up Procedure	1-1
1-3	New Machine Checkout	1-1
1-4	Coin Acceptor	1-2
1-5	General Machine Maintenance	1-3
Section 2	Circuit Description	
2-1	General System Description	2-1
2-2	SYNC Printed Circuit Board	2-5
2-3	Score Printed Circuit Board	2-8
2-4	Coin Control Printed Circuit Board	2-10
2-5	Car Printed Circuit Board	2-13
2-6	Power Supply Printed Circuit Board	2-19
2-7	Operator Adjustments & Instructions	2-19
2-8	Service and Troubleshooting	2-21
Section 3	Customer Service Information	
3-1	Test Equipment	3-1
3-2	Required Minimum Equipment	3-2
3-3	Optional Equipment	3-2
3-4	Logic Types and Functions	3-3
Section 4	Schematics, Drawings and Parts Lists	

1. GENERAL MAINTENANCE INFORMATION

1-1. INTRODUCTION

The Atari Indy 800 game consists of a cabinet, TV monitor, printed circuit boards (PCBs), interconnecting wiring, and various cabinet-mounted circuit components. Except for a schematic, no information about the TV monitor is presented in this manual. The TV monitor is a GE 25" color unit. TV circuit malfunctions can be solved using standard TV troubleshooting techniques. However, the PCB computer requires troubleshooting techniques that may be unfamiliar to the average technician. Therefore, the troubleshooting information in this manual is dedicated to the PCBs and their associated cabinet circuitry.

1-2. NEW MACHINE SET-UP PROCEDURE

Before turning this machine on, inspect it carefully for any damage which may have occurred during shipment. Inspect both interior and exterior of the machine for any obvious damage to the cabinet or internal components. Check for cracked or broken cabinet parts, assemblies pulling loose, broken or disconnected wires, or foreign objects shorting electrical connections. After the machine has been plugged in and turned on, perform the checkout procedure.

1-3. NEW MACHINE CHECKOUT

As each new machine leaves the factory, every component and subassembly is carefully checked for proper operation. However, since parts may have been damaged or adjustments changed during shipping, the following checkout procedure must be repeated prior to placing the machine on location:

1. Inspect both the exterior and interior of the machine for obvious shipping damage such as cracked or broken cabinet parts, subassemblies broken loose, etc.
2. Carefully inspect the interior of the machine to see that all solder joints, slip-on connectors, and plug-in type connectors are firmly seated. Pay particular attention to the PCB edge connector and the fuses. Also check the connections to the coin switch, the TV monitor, the interlock switches, and all other Molex-type connectors.
3. Plug the machine in, and pull out the white actuator shafts of the interlock switches if the rear door is open. Inspect the cathode ray tube image for a steady and sharp picture that exhibits the proper levels of brightness and contrast.

4. Insert several old and new coins into the coin acceptor. No genuine coin should be rejected, and each coin insertion should step the coin counter one digit. Depress the coin rejector button to make sure that the linkage is operating smoothly.
5. Coin insertion should start the game. Check for proper game sequence, making sure that all aspects of the game are functioning correctly.
6. The interlock switch must turn off the entire machine when the rear door is opened.

1-4. Q-530 COIN ACCEPTOR: OPERATION, ADJUSTMENT & MAINTENANCE

All coin acceptors leave the factory adjusted for maximum performance. If, however, more critical adjustments are desired, or if the unit has been completely disassembled for service, the following adjustment procedure is suggested. If the coin acceptor has been removed from the machine, place it in a vertical position on a level surface. If the acceptor is still mounted on the coin door, place the coin door in a vertical position on a level surface.

1. Kicker and Separator

   a. Set the acceptor with the back of the unit facing you in the test position.
   b. Loosen the screws holding the kicker (1) and the separator (3) and move both the kicker (2) and the separator (4) as far to the right as they will go. Tighten the screws.
   c. Insert several test coins (both old and new) and note that some are returned by striking the separator.
   d. Loosen the separator screw and move the separator a slight amount to the left. Tighten the screw.
   e. Insert the test coins again and, if some of them are still returned, repeat Step d until all the coins are accepted.
   f. Loosen the kicker screw and move the locker as far to the left as it will go. Tighten the screw.
   g. Insert the test coins and note that some are returned.
   h. Loosen the kicker screw and move the kicker a slight amount to the right. Tighten the screw.
   i. Insert the coins again and, if some are still returned, repeat Step h until all the coins are accepted.
   j. Be sure that both screws are tight after the adjustments have been made.

2. The Magnet Gate

a. Set the acceptor with the front of the unit facing you in the test position.

b. Turn the magnet gate adjusting screw (2) out or counterclockwise until none of the coins will fit through.

c. With a coin resting in the acceptor, turn the adjuster in or clockwise until the coin barely passes through the magnet gate.

d. Test this adjustment using several other coins, both old and new, and if any of them fail to pass the magnet gate, repeat Step c until all the coins are accepted.

e. Fix the magnet gate in this position with a drop of glue or Loctite®, if necessary.

3. Acceptor Maintenance

Depending on the environment in which the acceptor is used, periodic preventive maintenance should be performed. The mainplate (5) may be cleaned with any household cleaner. Thorough rinsing and drying are necessary to remove deposits and/or film. Remove all metal particles from the magnet by guiding the point of a screwdriver or similar tool along the edges of the magnet. You will notice that the particles will cling to the point of the tool. Remove the transfer cradle (9) and the undersize lever (10) and clean the bushings and the pivot pins. A pipe cleaner is an effective cleaning tool. Apply powdered graphite or pencil lead to the pivot pins and bushings and reassemble. Spray the entire unit lightly with WD-40®, a lubricant.

1-5. GENERAL MACHINE MAINTENANCE

Due to its solid-state circuitry, your machine will require very little maintenance other than periodic cleaning, lubrication and TV monitor adjustment. The cabinet and plexiglass screen may be cleaned with any non-abrasive household cleaner. The coin acceptor and the rejector linkage should be sprayed lightly once every three months with WD-40® or a silicone lubricant. The potentiometer shafts must never be lubricated in any way. The TV monitor is adjusted only when the CRT picture is distorted, or if the contrast or brightness appear to be out of adjustment.

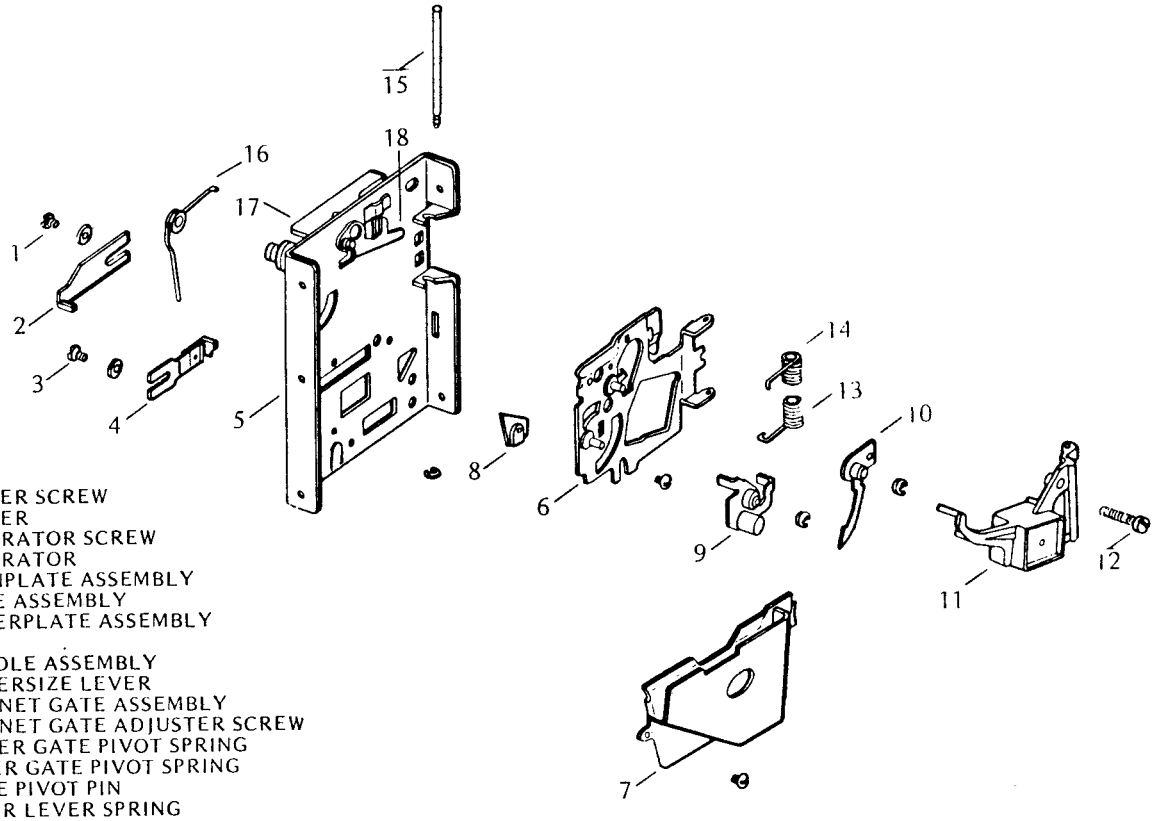

1 KICKER SCREW
2 KICKER
3 SEPARATOR SCREW
4 SEPARATOR
5 MAINPLATE ASSEMBLY
6 GATE ASSEMBLY
7 COVERPLATE ASSEMBLY
8 RAIL
9 CRADLE ASSEMBLY
10 UNDERSIZE LEVER
11 MAGNET GATE ASSEMBLY
12 MAGNET GATE ADJUSTER SCREW
13 LOWER GATE PIVOT SPRING
14 UPPER GATE PIVOT SPRING
15 GATE PIVOT PIN
16 WIPER LEVER SPRING
17 WIPER LEVER
18 WIPER

COIN ACCEPTOR – EXPLODED

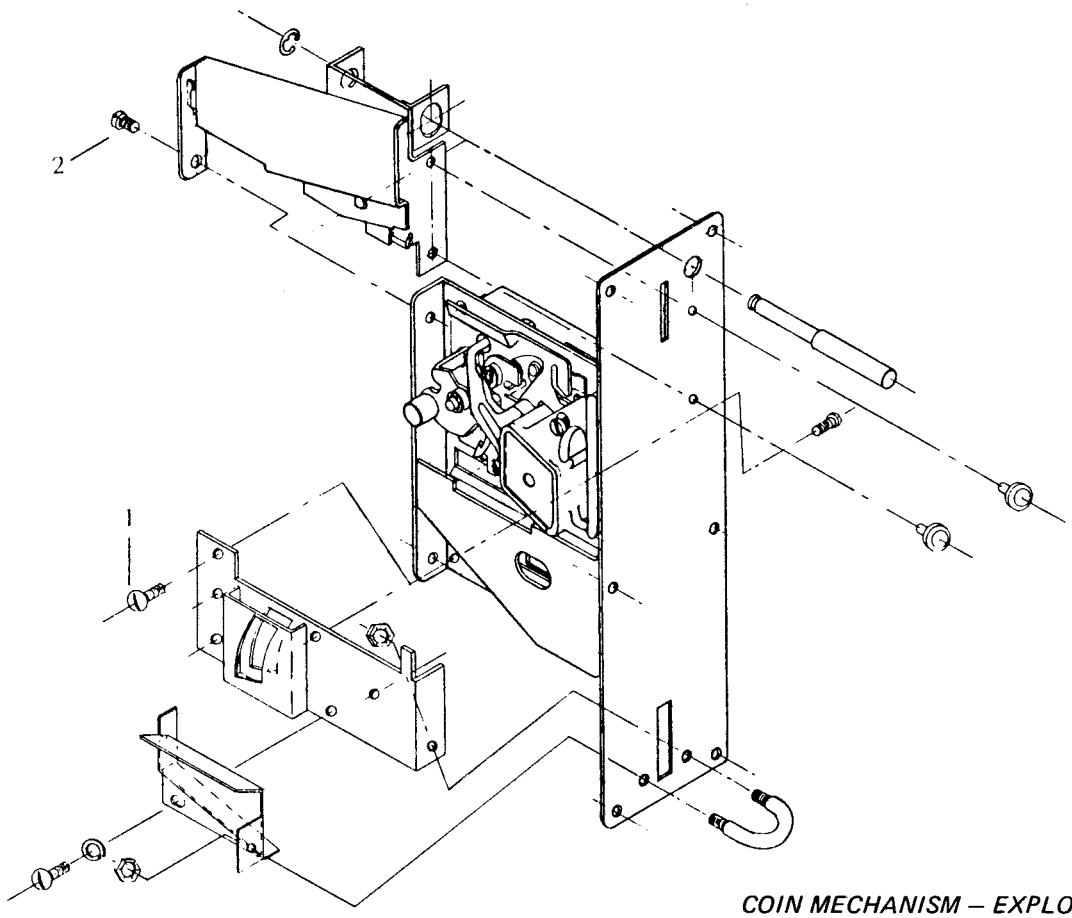

COIN MECHANISM – EXPLODED

2. CIRCUIT DESCRIPTION

2-1. GENERAL SYSTEM DESCRIPTION

1. The Indy 800 electronics system consists of the following components:

Part/Assy No.	Qty.	Description	Section	Page
A003182	1	Sync PCB	2-2	2-5
A003170	1	Score PCB	2-3	2-8
A003184	1	Coin control PCB	2-4	2-10
A003000	8	Car PCB	2-5	2-13
A003199	1	Backplane PCB	2-1	2-4
A003191	1	Power Supply PCB	2-6	2-19
A000607	8	Steering PCB	2-1	2-4
A003193	1	Remote panel PCB	2-4	2-11
92-013	1	25" color TV monitor	---	---
---	-	Harness & controls	---	---

The sync, score, coin control, and eight individual car boards are housed in a card rack within the game. These PCBs are interconnected by the backplane circuit board which is located at the rear of the card rack. The backplane board also provides edge connectors for interfacing with the other system components through the harness. Figure I-A shows the locations of the various boards and connectors within the card rack. The car numbers, colors, and steering wheel locations as well as locations of the card rack and power supply are shown in Figure I-B.

2. Basic functional description of each PCB

   a. Sync PCB

   This includes the system clock, the video sync counters, and timing function generators, the race track video, the score checkpoints, score video windows, and the ORing circuitry for detection of collisions with other cards. The master audio volume control is also located on this board.

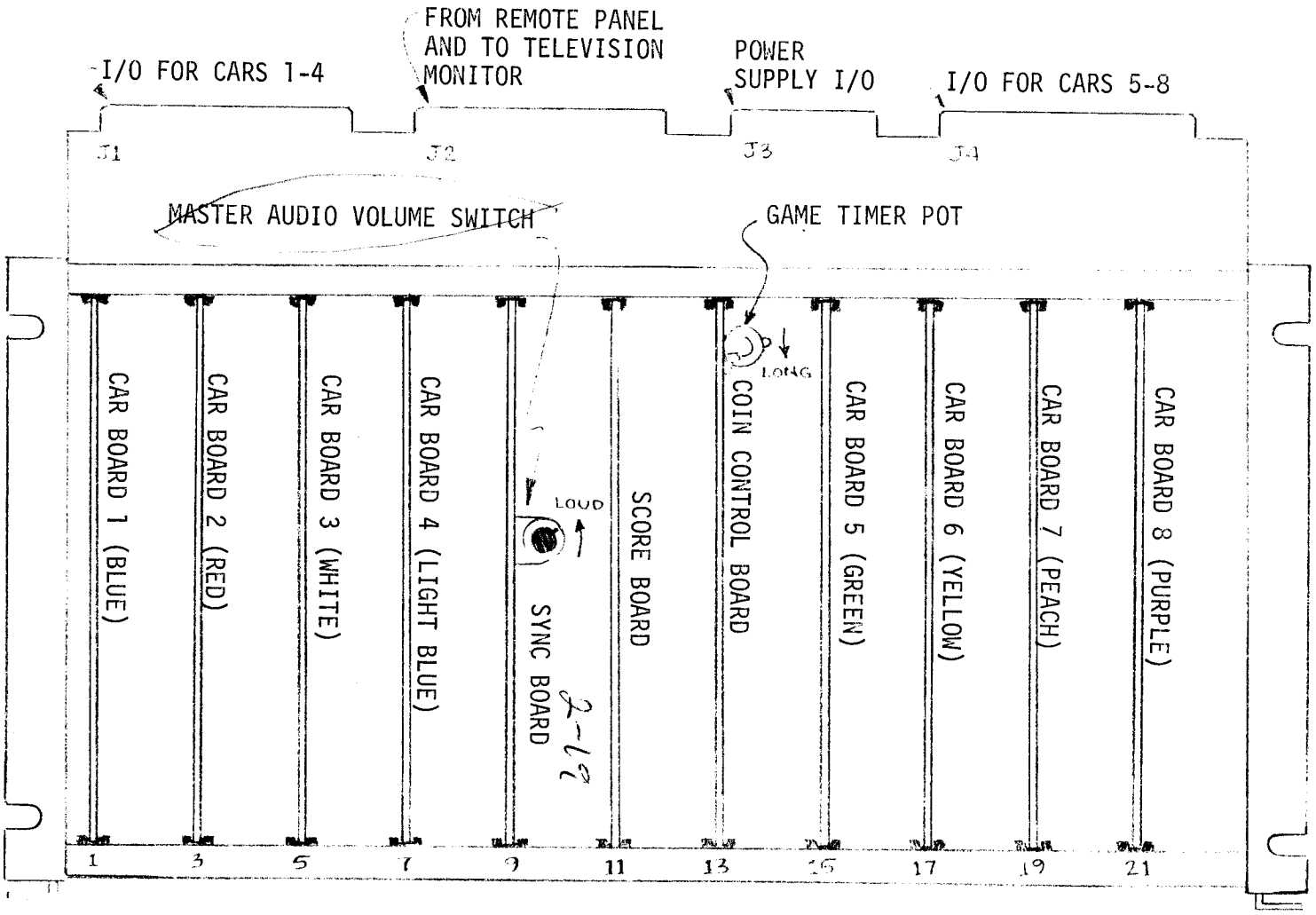

FIGURE I-A INDY 800 CARD RACK LAYOUT (FRONT VIEW)

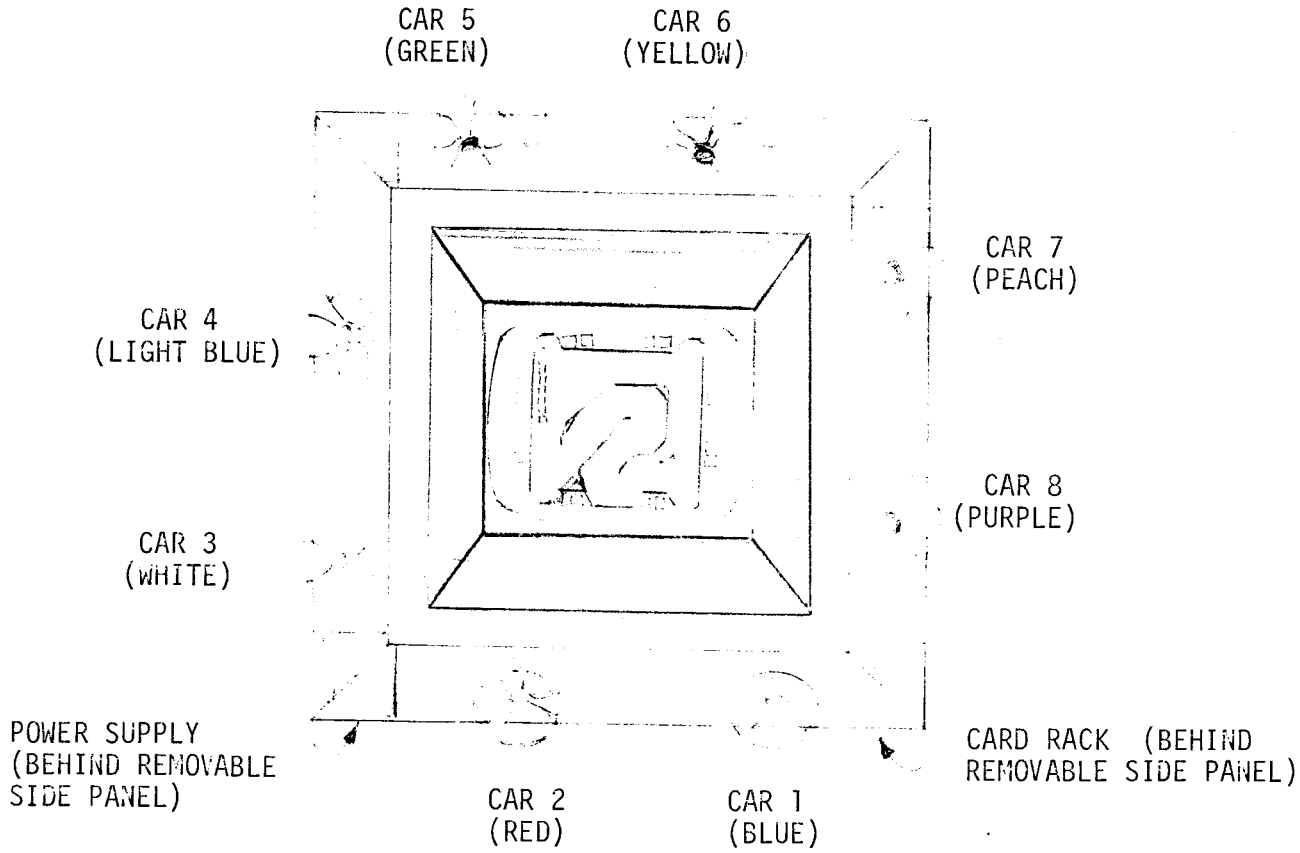

FIGURE I-B INDY 800 CABINET: LOCATION OF CAR CONTROLS AND ELECTRONICS

b. Score PCB

This includes all the circuitry necessary for detecting, counting, and displaying the score for each car. It also senses which car has the highest score and causes that score to blink. Finally, it contains the video outputs to the TV (except sync) and the TV calibration function circuit.

c. Coin control PCB

This monitors all coin inputs. It generates the reset and enable for each car in both the attended (with remote panel) and unattended (coin input, automatic) modes. The game timer and game turn-off circuitry are also included on this board.

d. 8 identical car PCBs

These control each of the individual cars. Each board contains all the circuitry necessary to rotate, move, and produce the video and audio for one car when enabled. The skid, collision, and crash detectors are also on this board.

e. Backplane board

This has no electronic components and serves only as an interface between the various components of the entire system.

f. Power supply PCB

This is the source of the unregulated power supplies for the digital and analog circuitry of the other boards. The relays and drivers for the coin mechanism lockout coils are also located on this board.

g. Steering PCBs

These are mounted on the backside of the steering wheel assemblies. The boards use optical sensing to produce two signals in quadrature, which may be decoded into rate and direction of rotation.

h. Remote panel

This is simply a switch board which is used to control the game in the attended mode of operation. Individual car enables, a master enable, and a start button are provided. When the remote panel is disconnected, the game automatically reverts to the unattended or automatic mode.

2-2. THE SYNC PRINTED CIRCUIT BOARD

The sync PCB has circuitry to produce the following functions:

1. System CLOCK and video countdown chain.
2. COMP SYNC signal to TV monitor.
3. Race track video.
4. Score CHECKPOINTS.
5. SCORE WINDOW.
6. OTHER CARS signal for each car.
7. +5 volts power for steering boards.
8. Miscellaneous timing signals to other logic.
9. MASTER VOLUME CONTROL signals.

The system CLOCK runs at 14.3 MHz. The horizontal countdown chain A4 B4, C4 (9316s) divides this basic frequency by 908 for each video line (15.76 KHz). The vertical countdown chain D4, D4 (7493), E3 (74107) divides the line rate by an additional 263 for a video frame (60 Hz).

The horizontal counter starts at 116 (binary 0001110100) and counts to 1024 (1111111111). The horizontal sync pulse (HSYNC) begins at count 256 and is 64 clock pulses wide (4.47 μsec). This is done at C3-9 (7474) where the rising edge of 256H clocks a low through to Q, which is set back to a high 64H later by B3-11 (7400).

The vertical counter counts from zero (binary 000000000) to 262 (100000110), at which time D3-12 (7410) goes low. At the next rising edge of 512H, this low is clocked through to C3-5 (7474). VRESET then resets the vertical counters to zero and the cycle begins again after VRESET is cleared again one line later. The vertical sync pulse (VSYNC) comes from an R/S flip flop, D3-1 (7202). It begins with VRESET and is 4½ lines long (290 sec).

The race track signal (RT) is generated by feeding sync counter signals into a 1K ROM, F4 (003189). The 4-bit output is multiplexed to a single line by F3 (74153) and is gated by 512H and by a signal to produce "dots" from A3-8 (7420).

Similarly, the score CHECKPOINTS come from a 256-bit ROM, E5 (003188) which is addressed with functions from the sync counters. The three lowest-order data outputs of this ROM are used to generate the score windows in which the score video will be shown. This generation is

accomplished in some random logic including A1 (7400), B1 (7486), and finally out of C1-8 (7420).

COMP RESET CLOCK is a signal which drives the car reset circuitry on the coin control board. It is a signal that occurs at horizontal count 544 through 1024 on one line out of every 12. D1 (74107) is hooked up as a divide-by-3 counter to produce a 4-line signal every 12 lines. B2 (7400) is hooked up as an R/S flip flip to produce the proper horizontal timing. These are ANDed together along with 1V and 2V signals to produce the required signal at C1-6 (7420).

BOUNDS is a signal that represents a horizontal boundary. It goes to the car reset circuitry on the coin control board. Any car found coincident with this signal is out of bounds and will be reset back to the starting line.

FLASH is a 4-bit (250 μsec) square wave used to make the score of the leader blink.

16V ⊕ 32H is a timing signal used in the generation of the score video. It is a digit select signal that multiplexes the high- and low-order digits of the score.

The OTHER CARS signals are a three-level ORing of every car except the one to which the signal is sent. They are used on the car boards to detect collisions between cars.

VCLOCK is a two-pulse signal during horizontal sync on each line (except those lines from 256V until the end of VSYNC). It is used to clock the vertical-motion counters on the car boards.

MASTER VOLUME signals choose one of four possible volume levels for all cars.

See Figure II-A for a diagram of the sync functions, race track, etc., as oriented on the TV screen.

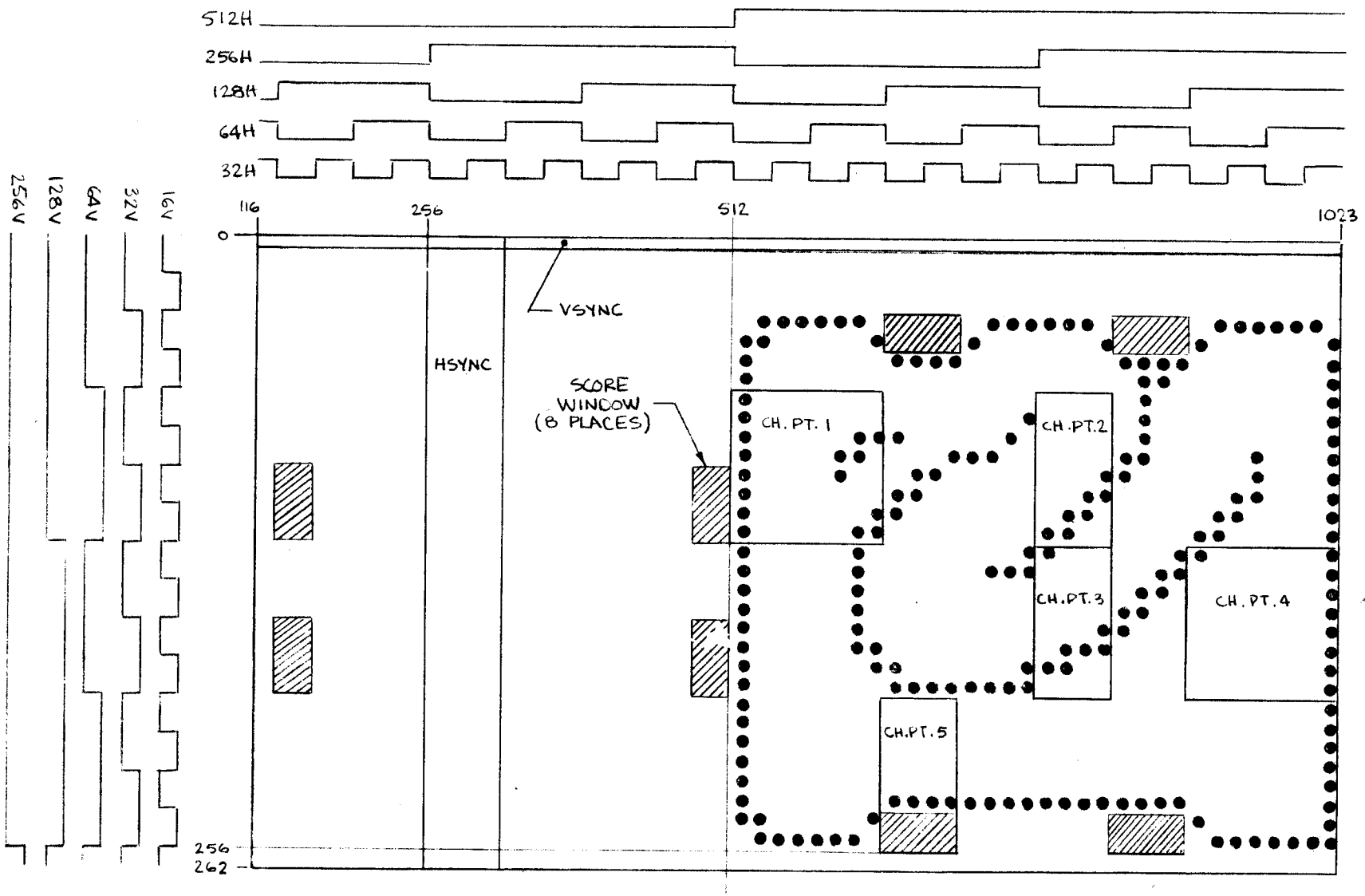

FIGURE II-A: SYNC FOR FUNCTIONS

2-3. THE SCORE PRINTED CIRCUIT BOARD

The score circuit board includes several subcircuits that detect, count, and display the score as well as detect the leader. Each car has 6 bits of score arranged in two digits of 3 bits each. The three least significant bits (nC, nB, nA, where n = car number) represent an even decimal digit from zero to 8 and are the signals from the divide-by-5 outputs of a 7490 decade counter. The three most significant bits (nF, nE, nD) are the outputs of a divide-by-8 counter configuration and they represent a decimal digit from zero to 7. Thus, the score for each car runs from 00 to 78, counting by twos.

Score is detected by sensing that the car crosses a series of "checkpoints" in a certain sequence. These checkpoints are generated on the sync board and are located at appropriate places along the race course (see sync board, Section 2). The detection of coincidence between car and checkpoints in the proper sequence is provided by a 9312 IC, an eight-input multiplexer. The circuit is shown in Figure III-A. Depending on the least significant digit (3 bits) of score, the next checkpoint to be crossed is selected.

From the score counters, the score bits are time-multiplexed in another stage of six 9312s so that each score is present at the output of the multiplexers when it is to be displayed on the screen. This time-multiplexed score information is then fed into two circuits -- the leader detector circuit and the seven-segment decoder.

The leader detector circuit operates as follows (see Figure III-B). At the start of a game, all of the score counters and the latches K2 (74175) and H2 (74174) are reset. H2 contains the high score bits and K2 contains a code telling which car first achieved that score. At each video frame all the scores are compared to the highest score by comparing the multiplexed score bits (A through F) with the outputs of H2. This comparison is made in the digital comparators J2 and F2 (7485). When the incoming score exceeds the previous high score, an output of the comparator is gated with some sync signals in C6 (7410) to avoid race conditions. The resulting signal clocks H2 and K2 to store the new highest score and new-leader code.

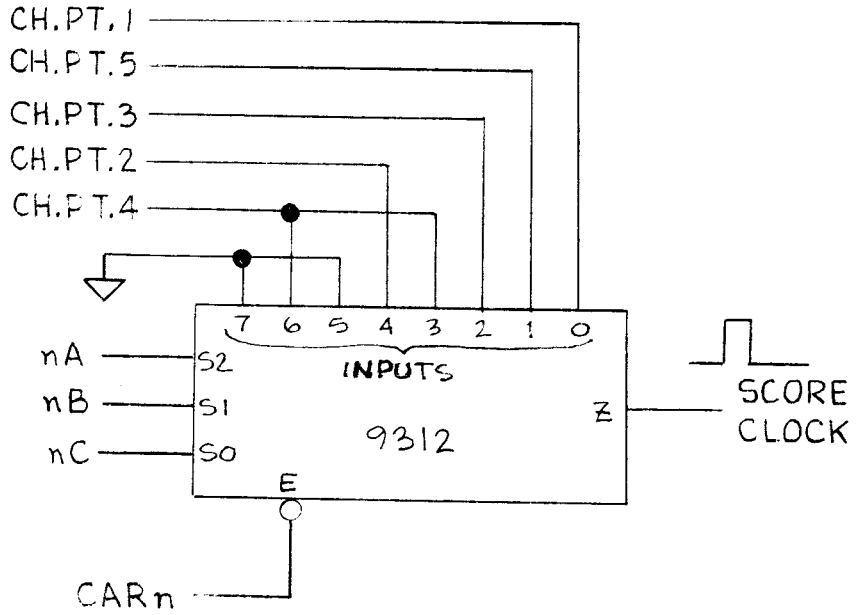

LEAST SIGNIFICANT SCORE BITS			SELECTED CHECKPOINT
nC	nB	nA	
0	0	0	CH. PT. 1
0	0	1	2
0	1	0	3
0	1	1	4
1	0	0	CH. PT. 5

FIGURE III-A: SCORE DETECTION CIRCUIT

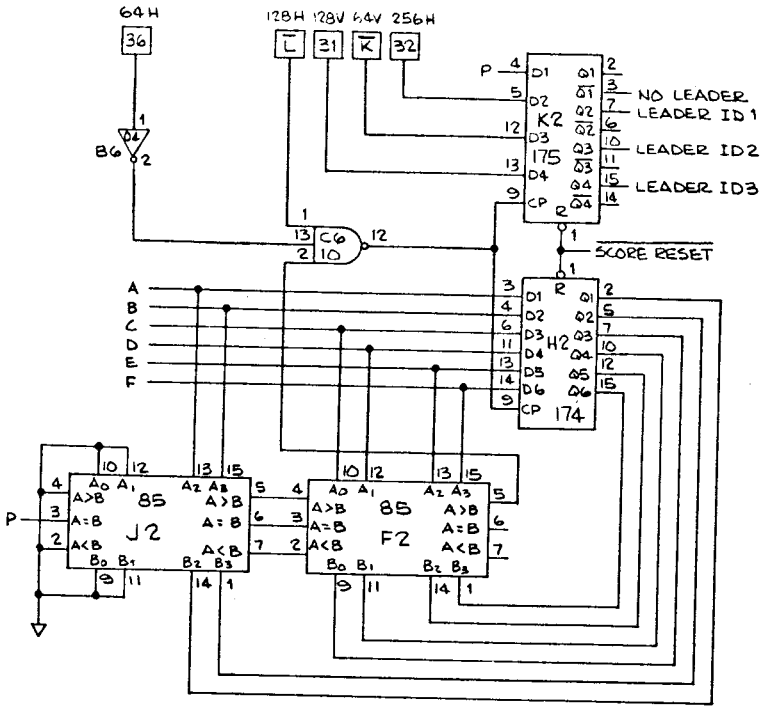

LEADER ID SIGNALS			NO LEADER SIGNAL	CAR IN LEAD
3	2	1		
X	X	X	1 *	NONE
0	0	0	0	1
0	0	1	0	2
0	1	0	0	3
0	1	1	0	8
1	0	0	0	4
1	0	1	0	7
1	1	0	0	6
1	1	1	0	5

* NO LEADER CONDITION IS PRESENT ONLY AT START OF GAME.

FIGURE III-B: LEADER DETECTOR CIRCUIT

The time-multiplexed score is further multiplexed into two digits in H1 (9322) and this information is fed into a seven-segment decoder, F1 (7448). A digital comparator, L2 (7485), is used to make the score of the leader blink by exciting the blanking input of F1 when the LEADER I.D. code matches the time-multiplexed sync signals (256H, 64V, 128V).

Four 74153s (A1, B1, D1, E1) and three 9312s (A2, B2, C2) are the function generators that translate the multiplexed seven-segment data into score video information. E1 and B1 form the seven-segment characters for scores 1, 2, 5, and 6. E1 (74153) forms the vertical segments b, c, e, and f. B1 (74153), together with a blanking signal from B2 (9312), forms the horizontal segments a, d, and g. These are ORed in C1 (7432): C1-11 has the video for scores 1 and 2; C1-8 has the video for scores 5 and 6. Similarly, D1 (74153) forms the vertical segments for scores 3, 4, 7, and 8, and A1 (74153) and A2 (9312) produce the horizontal segments. These are again ORed in C1 (7432): C1-6 has the video for scores 3 and 4; C1-3 has the video for scores 7 and 8. These separate video signals are remultiplexed in C2 (9312), where the score window from the sync board is used to gate the information through at the proper time.

This composite score video signal is then demultiplexed in D6 (9301) into eight separate score video signals. These signals are then ORed with the car signals in E6 and F6 (7408), ANDed with the video function SIGNAL, and sent out to the television as video information. There is some slight additional circuitry that creates video test and alignment functions on the white video output line (car 3). These functions are: normal operation, all-white screen, all-black screen (no video), and a dot pattern for convergence adjustment. They may be selected by attaching the appropriate jumper as shown on the schematic.

2-4. COIN CONTROL PRINTED CIRCUIT BOARD

The coin control circuit board contains the circuitry for the following functions:

1. Coin detection and credit latches.
2. Game control, game timer.
3. Car reset circuitry.

The heart of the coin detection and credit latch circuitry is the LM339 quad analog comparator. This device is used to sense a proper coin input and to latch and register credit for that coin until the end of the game. Normally open and normally closed coin inputs are brought into an inverter latch where the coin signal is debounced.

When the coin switch is closed, the 0.1 µf capacitor on the non-inverting (+) terminal of the LM339 is discharged through a 68K resistor. If the switch is closed for more than 12 msec, the voltage at the non-inverting terminal of the LM339 will go negative with respect to the inverting (-) terminal voltage (ref. Voltage). When this occurs, the output of the LM339 changes state. Through positive feedback, this state is latched into the comparator. If the coin switch is closed for less than 6 msec, the capacitor will not discharge sufficiently to allow the output of the LM339 to change state. Between 6 and 12 msec, the latching may or may not take place, depending on device tolerances. The typical duration of coin pulse needed to toggle the latch is 10 msec. At the end of the game, or in case of a power or static interrupt, the REF voltage at the inverting (-) comparator input is pulled low. The output again goes high, and the 0.1 µf capacitor is quickly recharged through a diode.

The game control circuitry determines which cars are enabled in all modes of operation. There are three basic modes of operation:

1. Unattended (automatic).
2. Attended with coin inputs, remote start.
3. Attended with remote enable and start.

In the attended mode, the remote panel is not used. In the first attended mode the start button on the remote panel is used, but the enable switches are not (they should all be turned to the "off" position). The second attended mode assumes manual collection of money by the attendant. The lockout coil switch on the power supply board should be turned to "off" so that no money can be put into the machine. The attendant then enables any or all of the cars by turning the appropriate switches on the remote panel and pushing the start button.

The coin board determines whether it is in the attended or unattended mode by seeing if the remote panel is connected to it. If the remote panel is connected, then the $\overline{\text{REMOTE}}$ signal will be low (provided by a grounded jumper in the remote connector). Otherwise $\overline{\text{REMOTE}}$ will be high or pulled up. This signal goes to a 9322 quad two-input multiplexer (D2) that selects the proper control functions for required mode of operation.

In the unattended or automatic mode of operation, if any coin has been put into the machine, CREDIT is high (from CREDIT 1, IC C5, 7430). When CREDIT goes high, the game counters K1, J1 (7493s) start counting. After eight pulses from the 1 SEC oscillator, L1 (555), the PLAY 1 latch H1-10 and K1-13 (7402) changes state and the game starts.

If the game is in the play mode and car n has credit (Qn is high), then ATTRACT n will go low (ICs H4 and F4, 7400). This enables the controls on car n so that it may be driven. During the eight-second waiting period, the $\overline{\text{SCORE RESET}}$ signal is driven low by C2-8 (7410). At the end of the game, after 128 pulses from the one-second clock, the END GAME latch H1-4 (7402) produces a pulse to reset the credit latches.

In the attended mode, the START signal clocks the CREDIT 2 flip flop at C3-11 (7474). If any coin latches are set or remote enable switches are in the "on" position, CREDIT and PLAY will go high. The score will be reset by the START signal. At the end of the game, the END GAME latch (H1) will reset the CREDIT 2 flip flop (C3) through C2-4 (7410).

The car reset circuitry resets each car at the start of the game and if it travels out of bounds. COMP RESET CLOCK shifts a series of high signals through the 8-bit parallel out-shift register, C4 (74164). As the high signal ripples through the shift register on consecutive pulses from COMP RESET CLOCK, the individual car reset clocks (CRC 1 through CRC 8) are produced. These are used to clock the car reset flip flops A3, A4, B3, B4 (7474s). If coin switch n is closed or if car n is out of bounds, the set input of car reset flip flop n will be pulsed low, and CAR RESET n will go high. If the game has credit but car n does not, then the D-input to the reset flip flop will be held high and CAR RESET n will be continuously clocked high by CRC n. As long as the CAR RESET signal is high, car n will disappear. Then credit for car n is established, CAR RESET n will be clocked low, and the car will reappear at the starting line.

2-5. CAR PRINTED CIRCUIT BOARD

The car board contains the following circuits:

1. Car steering processor.
2. Car acceleration processor.
3. Car motion counters.
4. Car video processor.
5. Crash and collision detection.
6. Sound synthesis and power amp.

The steering processor is a two-stage up/down counter (E2 and F2, 74193s) with decoding circuitry in front (E3, 7474, and E1, 7300) and the skid detector (C1, 7400) and latch (D1, 7475) after. When the circuit is enabled (attract goes low), the decoder circuitry translates a quadrature signal from the steering board into direction and rate of turn information -- see Figure V-A). $\overline{VTC}$ on E3-13 (7474) serves as a maximum turning rate signal.

When there is a collision between cars, E1-6 (7400) forces the car to turn for the duration of the COLLISION signal at the maximum turning rate. The red LEDs on the outputs of H4-10, 12 (7414) serve only as visual indicators of the operation of the quadrature signal from the steering board. E2 and F2 (74193s) divide the rotation pulses of the decoder circuit by 128. The last five bits of this division become the rotation code R4-R0* that represents a specific car orientation. Binary 00000 is straight up; the count continues clockwise through 32 consecutive positions up to binary 11111, which is just left of straight up. The skid latch D1 (7475) contains the direction code* of the car or D4-D1 (the lowest-order direction bit is R0).

*The rotation code R4-R0 tells in which direction the car is pointed; the direction code D4-D1, R0 tells the direction of motion.

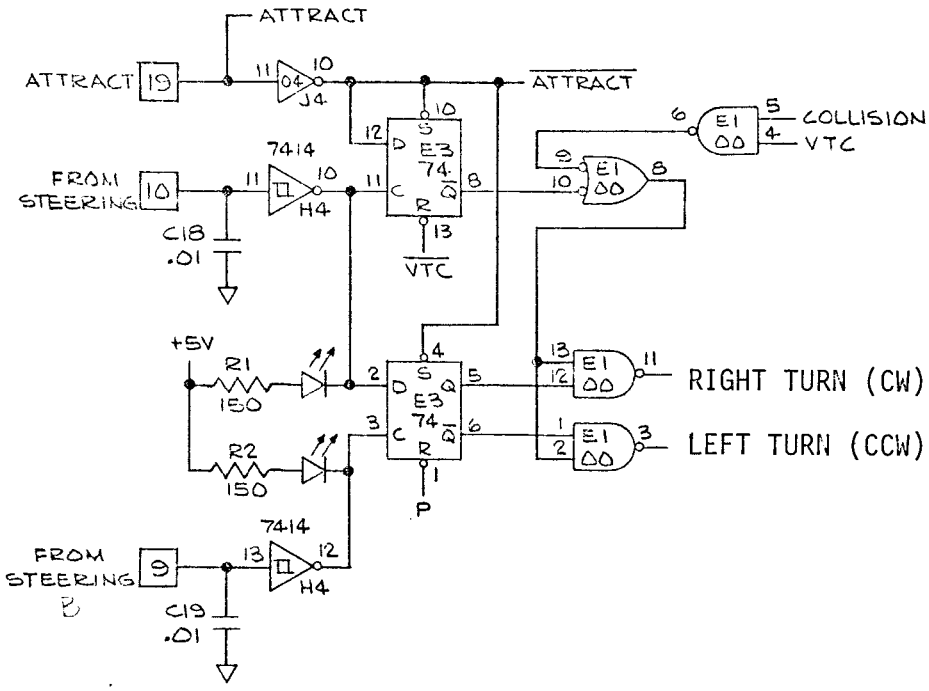

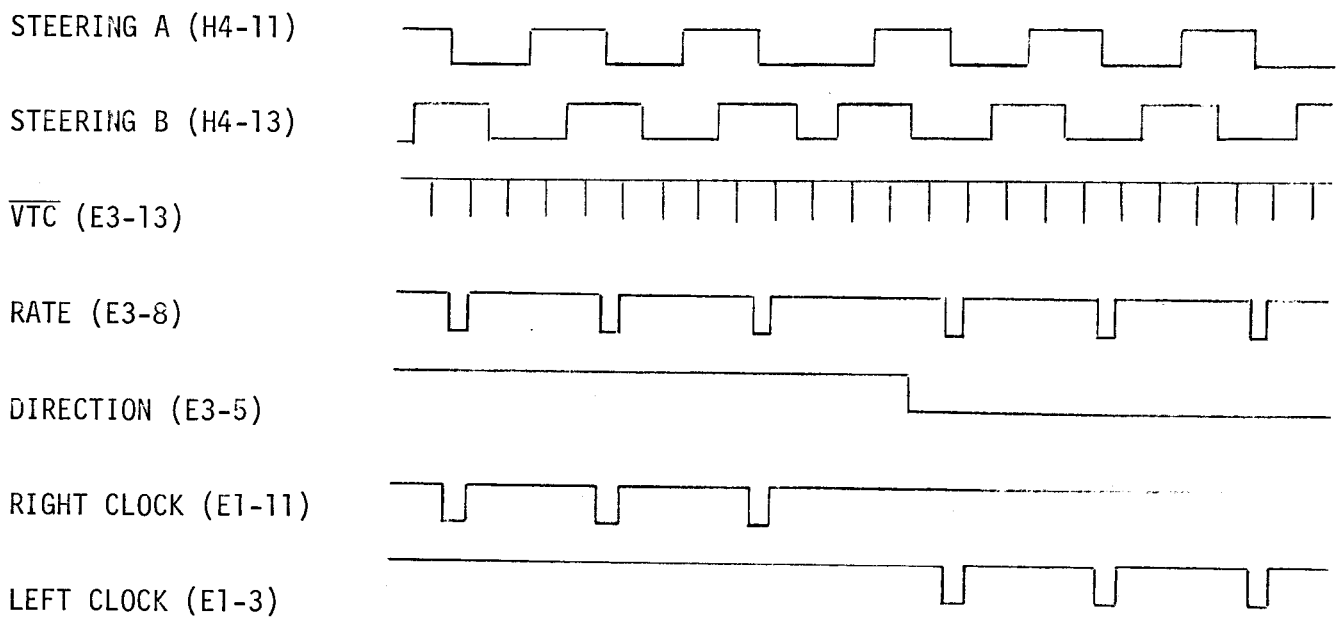

FIGURE V-A STEERING DECODER CIRCUIT WITH SAMPLE WAVEFORMS

This code differs from the rotation code only when the car is in a skid. The skid condition is determined by C1 (7400). If the car is at quarter-speed or greater when the brake is depressed, or if the car collides with another car, a skid condition exists, and $\overline{\text{SKID}}$ goes low to latch the last rotation into D1.

The acceleration processor consists of some preprocessing circuitry (D3, 74153) to create acceleration and deceleration pulses, an up/down counter (C2, 74193) to count these pulses and keep track of the speed, and a circuit (D2, 7485) that translates this speed information into speed pulses in the GO signal.

With only the gas pedal depressed, the car will accelerate at the rate of one unit per 16 frames (signal from C3-6, 7420 gated with 8F at D3-4). With no pedal depressed or with only the brake depressed, the car will decelerate at the rate of one unit per eight frames. With both gas and brake pedals depressed, the car will decelerate one unit per 16 frames. The up/down counter, C2 (94193) with a fifth stage A1-5 (7407), counts these acceleration units. At speed 14 (binary 11110), C3-8 (7420) gates out any further acceleration pulses and maximum speed is attained. At speed zero, in the attract mode, or after a crash into the pylons, the STOP signal resets the counter outputs to zero. The digital comparator D2 (7485) compares the speed code (SPEED 5-SPEED 1) against frame bits (1F-16F) from B1 (7493) and A1-3 (74107). The result is shown in Figure V-B.

The motion circuit operates on the principle of the Atari patented "slipping counter" method of moving objects on a raster scan display (patent no. 3793483). The motion counters count in parallel with the sync counters on the sync board. In order to move vertically, the vertical motion counter K3 (9316), L3 (9316), and J1-5 (74107) is forced to count short (up) or long (down) with respect to the sync vertical counter. Similarly, the horizontal motion counter H3, J2, H2 (9316s) causes horizontal motion by counting short (left) or long (right) with respect to the sync horizontal counter.

Each frame in which the GO signal is high causes the motion counters to make a unit move in the direction specified by the direction code (D4-D1, RO). To move faster, GO is high more often. A table of approximate sine/

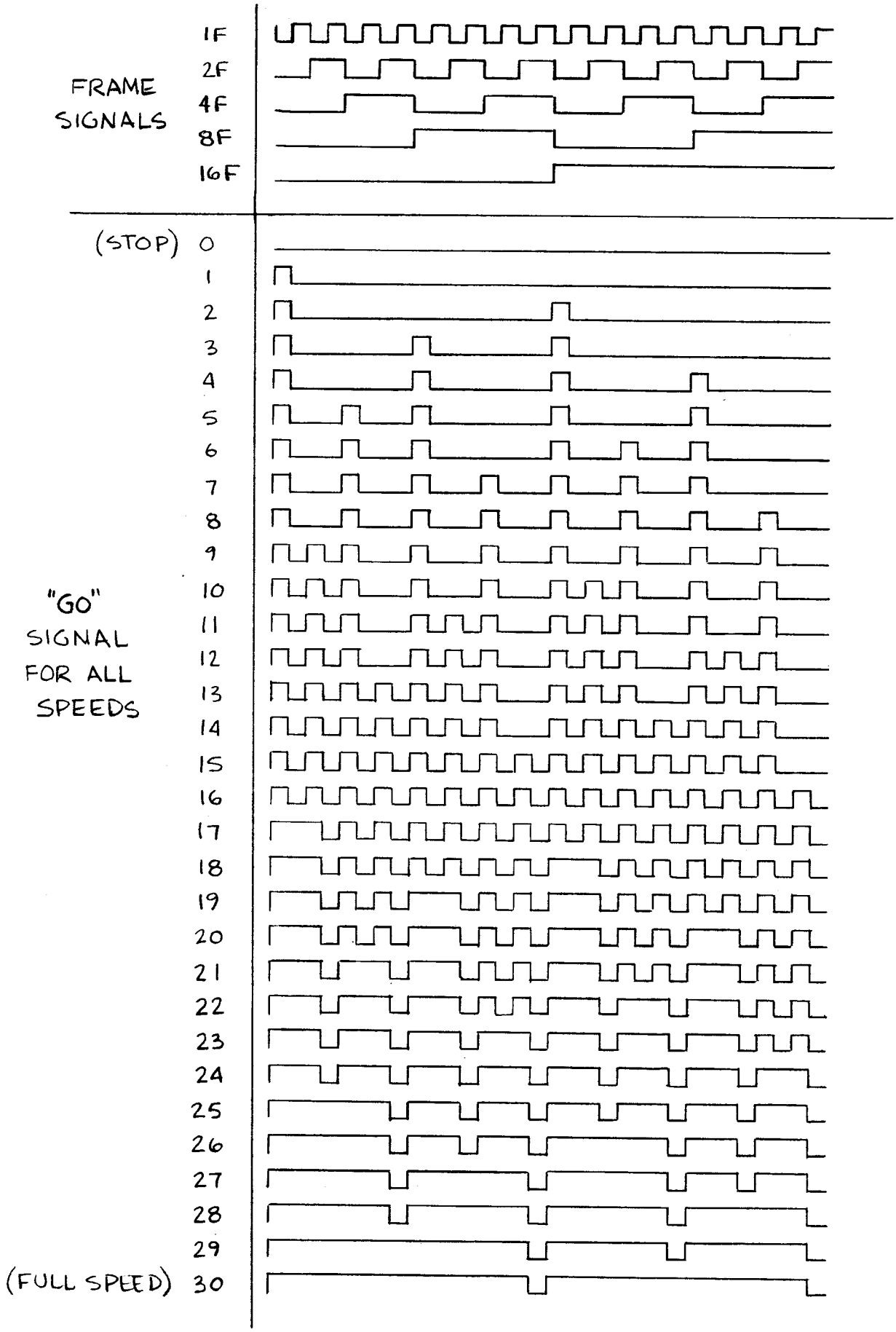

FIGURE V-B: "GO" SIGNAL (SPEED PULSES)

cosine values for the 32 different directions is contained in a PROM (K4, 003187). This motion code goes to the motion counters when GO enables the PROM. The horizontal motion code is gated with $\overline{\text{VRESET}}$ in F3 (7402). This limits the long or short count to one line of the frame. A table of the horizontal and vertical motion codes for all 32 directions, as seen at the load inputs of H3 and K3 (9316s), is given in Table V-C. The horizontal counter is clocked at the system clock rate of 14.318 MHz.

In order to maintain the same amount of motion resolution vertically as well as horizontally, the vertical motion counter is clocked by VCLOCK. This signal is two pulses per line and is gated out during vertical sync so that the vertical motion counter requires one less stage. Using the terminal count outputs of the counters, a car window is formed of 16 clock pulses by 8 lines.

The video processor uses line, column, and rotation information to address video information in a 4K ROM, K2 (003186). Further column information from the horizontal motion counter is used to multiplex the ROM outputs to a single line from L2 (9312). This video is then clocked into J1-3 (74107) to remove edge effects and race problems. The result is the car video information.

When the car collides with another car, L1 (555) produces a half-second pulse during which the car will skid and spin. If the car crashes into the pylons, a low pulse is made at $\overline{\text{CRASH}}$ (H1-8), 7400). This signal stops the car and triggers the crunch sound. $\overline{\text{CRASH SEQ}}$ remains low and prevents further crashes until the car is no longer in contact with the pylons.

The sounds that are synthesized are the MOTOR SOUND, HORN, CRUNCH (crash), and SCREECH (skid). The MOTOR SOUND is produced by performing a D/A conversion on the speed code (SPEED 5-SPEED 1), and using the result to drive a current source that controls the oscillation frequency of B3 (555). This frequency is divided by both 6 and 4 and various divisions are mixed. The HORN is a 760-Hz signal gated by the horn button input. CRUNCH is made by gating noise from a noise source (D5-1, LM324) with a discrete one-shot, triggered by $\overline{\text{CRASH}}$. The SCREECH sound is formed by an op amp (D5-14, LM324) configured as a free-running multivibrator. This oscillator is also perturbed by the noise source to give it a

DIRECTION CODE D4-D1, R0	HORIZONTAL INPUTS (H3) D C B A	VERTICAL INPUTS (K3) D C B A
0 0 0 0 0	0 1 0 0	1 1 0 0
0 0 0 0 1	0 0 1 1	1 1 0 0
0 0 0 1 0	0 0 1 1	1 0 1 1
0 0 0 1 1	0 0 1 0	1 0 1 1
0 0 1 0 0	0 0 0 1	1 0 1 1
0 0 1 0 1	0 0 0 1	1 0 1 0
0 0 1 1 0	0 0 0 1	1 0 0 1
0 0 1 1 1	0 0 0 0	1 0 0 1
0 1 0 0 0	0 0 0 0	1 0 0 0
0 1 0 0 1	0 0 0 0	0 1 1 1
0 1 0 1 0	0 0 0 1	0 1 1 1
0 1 0 1 1	0 0 0 1	0 1 1 0
0 1 1 0 0	0 0 0 1	0 1 0 1
0 1 1 0 1	0 0 1 0	0 1 0 1
0 1 1 1 0	0 0 1 1	0 1 0 1
0 1 1 1 1	0 0 1 1	0 1 0 0
1 0 0 0 0	0 1 0 0	0 1 0 0
1 0 0 0 1	0 1 0 1	0 1 0 0
1 0 0 1 0	0 1 0 1	0 1 0 1
1 0 0 1 1	0 1 1 0	0 1 0 1
1 0 1 0 0	0 1 1 1	0 1 0 1
1 0 1 0 1	0 1 1 1	0 1 1 0
1 0 1 1 0	0 1 1 1	0 1 1 1
1 0 1 1 1	1 0 0 0	0 1 1 1
1 1 0 0 0	1 0 0 0	1 0 0 0
1 1 0 0 1	1 0 0 0	1 0 0 1
1 1 0 1 0	0 1 1 1	1 0 0 1
1 1 0 1 1	0 1 1 1	1 0 1 0
1 1 1 0 0	0 1 1 1	1 0 1 1
1 1 1 0 1	0 1 1 0	1 0 1 1
1 1 1 1 0	0 1 0 1	1 0 1 1
1 1 1 1 1	0 1 0 1	1 1 0 0
STOP CODE	0 1 0 0	1 0 0 0

TABLE V-C: UNIT MOTION CODES INTO MOTION COUNTERS

"gritty" quality, and it is turned on and off by the SKID signal F4-8 (7406); the sounds are then mixed, buffered, and fed into a digitally controlled four-position master attenuator. The audio volume trimpot should be adjusted so that with the horn turned on, the signal at D5-8 (LM324) is 0.75 volt peak to peak. Finally, the audio signal is amplified by the LM380 power amp.

2-6. POWER SUPPLY PRINTED CIRCUIT BOARD

The power supply board has the circuitry for the unregulated supplies and for driving the coin mechanism lockout coils.

The unregulated supplies are both full-wave center-tap rectified configurations. The +9V supply may vary from 7.5V to nearly 11V, depending on line voltage at the transformer primary and the load current. It supplies the power for the +5V regulators on the logic PCBs. The +20V supply may vary from 8V to 22V, again depending on line and load conditions. It supplies power for the audio electronics on the car boards and for the lockout coil drivers.

The lockout coil driver should be active when the $\overline{LO}$n signal is high, i.e., when car n has credit. This turns transistor Qn on, powers the coil of relay Kn, and applies 20V to the lockout coil on coin mechanism n (activating the coil disengages the lockout function). The diode across the relay coil shorts inductive spikes of turn-off. The diode from the emitter of the transistor to ground increases noise immunity by raising the turn-on voltage of the transistor. The 100-ohm resistor from the relay coil to +20V is a current limit resistor to limit the dissipation in the relay and the transistor.

2-7. OPERATOR ADJUSTMENTS AND OPERATING INSTRUCTIONS

1. Adjustments

There are several adjustments available to the operator. These are:

a. Master volume switch (sync PCB).
b. Game time adjustment (coin control PCB).
c. Lockout coil power switch (power supply PCB).

The master volume switch adjusts the overall audio volume level to one of four possible levels. It is located on the sync PCB as shown in Figure I-A. Clockwise adjustment decreases volume; counterclockwise

adjustment increases the sound level. All of the car PCBs have their own separate volume controls. These are preset at the factory for balanced output levels and should be changed only by service personnel making repairs or adjustments to the car PCBs.

The game timer potentiometer is located on the coin control PCB in the upper corner near the front of the card rack. It adjusts the length of the game from approximately 75 seconds to nearly three minutes. Game time is increased by turning the pot downward or clockwise as seen from the front of the card rack.

The lockout coin power switch is located near the edge connector of the power supply PCB. If switched to the "off" position, all of the coils will go into the coin lockout mode, and the machine will not accept coins. This feature is useful in applications where an attendant collects payments manually and uses the remote panel to control the game. In order to use the coin mechanisms in the machine, this switch must be in the "on" position and power must be on.

2. Operating instructions

The unattended or automatic mode: after insuring that the machine is properly assembled and secure, apply power by inserting the power plug into a 105-125 VAC, 60-cycle, three-pronged or grounded receptacle rated for at least 5 amperes (600 watts). It will take a few minutes for the TV monitor to warm up. The game should come on in the attract mode (no sound or car motion). A coin in any slot will increment that coin counter, cause the lockout coil to engage, and reset that car to the starting line. After approximately eight seconds, the game will start (sound will come on and the cars may be driven). All cars that have not received credit will disappear from the TV screen. The eight-second delay allows all players to deposit their money before the game starts. Any player depositing money after the game starts will also get his car reset to the starting line and may play for the remainder of the game. The lockout coil power switch must be on, and the remote panel must be disconnected for this mode of operation.

The attended mode or using the remote panel: with power off (power cord disconnected), remove the side access panel. Guide the remote panel cable through the power cord outlet hole and into the machine. Connect the cable to the mating connector coming from the main harness just left of the card rack. If the coin mechanisms are to be used, the lockout coil power switch should be in the "on" position; it should be off if money will be collected manually. Put the access panel back into place. After insuring that the game is properly assembled and secure and that all toggle switches on the remote panel are in the "off" or downward position, apply power of 105-125 VAC, 60 cycles, 5 amperes, third terminal grounded.

If the coin mechanisms are used for money collection, the game will perform as in the automatic mode, except that to start the game the start button on the remote panel is used. All toggle switches on the remote panel should be in the "off" position at all times in this mode.

If money is collected manually, the cars for which payment has been received are enabled by toggling the appropriate switches on. Optionally, if all cars are to be enabled, the master switch in the center of the remote panel may be switched on. The game may be stopped at any time by disabling all the cars -- if a restart is desired or if a contest for a certain number of laps is desired. To start a game after setting the switches to their proper positions, push the "start" button.

2-8. SERVICE AND TROUBLESHOOTING

Indy 800 is sold with spare circuit boards for all boards in the card rack and one spare steering PCB. When inserting circuit boards into the card rack, take the following steps to insure that the game will not be damaged:

1. Be certain that the board is the proper type for that position and that it is not reversed. See Figure I-A for location of board types. Heatsinks should always be at the top of the board and to the right.

2. Be certain that the board is inserted straight into position in the card guides.

3. Pushing gently, wobble the board slightly until it begins to seat into the connector. If it does not begin to seat, recheck steps 1 and 2 and check for warpage of the board. Correct any problem.

4. Applying firm, constant pressure, push the board into place until it is seating fully. The front edge of the board should be flush with adjacent circuit boards. DO NOT use fast, jerky motions, as this could damage the backplane board or the edge connector.

When removing boards, always use the card ejector tool provided with the game. Hook the bolt of the tool into the hole in the uppermost corner of the circuit board. Using the frame of the card rack as a pivot, pull gently up to disengage the card from the backplane (see Figure VIII-A). Remove the ejector tool and pull the card out by hand.

When troubleshooting, the short description of each board in Section 1 should be a great help in quickly locating a problem. Replacing the suspect circuit board with a replacement gives quick verification of the source of the problem. To fix a circuit board, refer to the schematic and technical description provided in this manual. Repair of circuit boards should be attempted only by qualified technical personnel with proper equipment. As an additional aid to maintenance, the system has been designed so that all eight car PCBs are interchangeable. Also, removing one car board will only disable that car, without affecting any others.

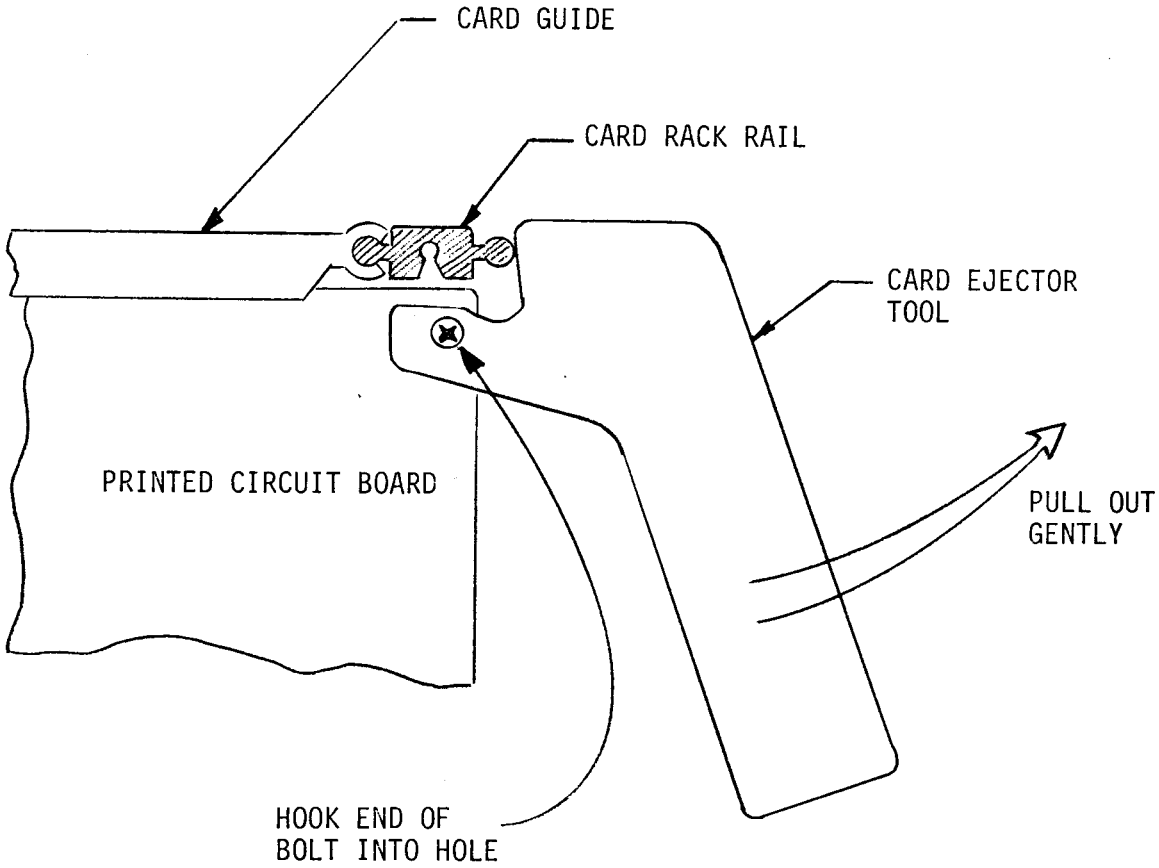

FIGURE VIII-A USE OF THE CARD EJECTOR TOOL

3. CUSTOMER SERVICE INFORMATION

3-1. TEST EQUIPMENT

In order to test any Atari PCB, some items such as the logic probe are absolutely essential. Others are desirable and will make the test procedure easier but are not absolutely essential. Some of these instruments are available from the Atari Customer Service Department and these are: the Kurz-Kasch 520 Logic Probe, the Atari Video Probe and the Hewlett-Packard 10529A Logic Comparator. Other instruments that are very useful are the HP 10526T Logic Pulser and the Tektronix 465 Oscilloscope. These items are available through your local electronics supply house.

3-2. REQUIRED MINIMUM EQUIPMENT

The following items are absolutely essential to perform the test procedures presented in this manual:

1. Logic Probe: The logic probe is an instrument designed for checking the outputs of integrated circuits. The Kurz-Kasch Logic Probe, Model No. LP-520, which is available through the Atari Customer Service Department or most large electronics supply houses, is recommended. This logic probe indicates if a signal is logic high, logic low, or changing from one state to another. Consult the operating instructions included with the probe for further details about its operation.
2. Video Probe: The video probe is a very simple but extremely useful device and consists of two test clips, a length of rubber-coated, test lead wire, and a 4.7K, ¼-watt carbon resistor. Video probes may be obtained from the Atari Customer Service Department or, if necessary, they can be assembled from standard components available at all electronics supply houses.

3-3. OPTIONAL EQUIPMENT

It is possible to find 90% of the possible PCB computer malfunctions without the following items. However, if a complete set of trouble-shooting equipment is desired, Atari recommends:

1. Hewlett-Packard 10529A Logic Comparator

   The Hewlett-Packard 10529A Logic Comparator is used to verify correct IC operation. This device simply clips onto in-circuit ICs and instantly displays any logic state difference between the in-circuit test IC and the reference IC in the comparator. Logic differences for each pin of a 14 or 16 dual in-line package are indicated by a lamp on the comparator. If the logic comparator is purchased from the Atari Customer Service Department, it is shipped with 20 preprogrammed reference PCBs. If the device is purchased elsewhere, these PCBs must be specially programmed.

2. Hewlett-Packard 10526T Logic Pulser

   The Hewlett-Packard 10526T Logic Pulser is used to stimulate in-circuit ICs so that they are driven to their opposite states. This device is available from the Atari Customer Service Department or can be obtained from most large electronics supply houses.

3. Tektronix 465 Oscilloscope

   The Tektronix 465 Oscilloscope is used for viewing various wave forms and should be ordered from Tektronix. Consult the manufacturer's operating instructions for details on oscilloscope operation.

3-4. LOGIC TYPES AND FUNCTIONS

TYPE	FUNCTION
7400	QUAD 2-INPUT NAND GATE
7402	QUAD 2-INPUT NOR GATE
7404	HEX INVERTER
74S04	HEX INVERTER
7408	QUAD 2-INPUT AND GATE
7410	TRIPLE 3-INPUT NAND GATE
7413	DUAL NAND SCHMITT TRIGGER
7420	DUAL 4-INPUT NAND GATE
7425	DUAL 4-INPUT NOR WITH STROBE
7427	TRIPLE 3-INPUT NOR GATE
7430	SINGLE 8-INPUT NAND GATE
7448	BCD TO 7-SEGMENT DECODER
7450	DUAL AND/OR GATE (INVERTER/EXPANDER)
7474	DUAL D FLIP FLOP
7483	4-BIT FULL ADDER
7486	QUAD EXCLUSIVE OR GATE
7490	DECADE COUNTER
7492	DIVIDE-BY-12 COUNTER
7493	4-BIT BINARY COUNTER
74107	DUAL JK M/S FLIP FLOP
74153	DUAL 4-BIT MULTIPLEXER
74157	QUAD 2-INPUT DATA SELECTOR/MULTIPLEXER
74165	PARALLEL-LOAD 8-BIT SHIFT REGISTER
74192	SYNCHRONOUS DECADE UP/DOWN COUNTER

74193	SYNCHRONOUS BINARY UP/DOWN COUNTER
LM380	AMPLIFIER
NE555	TIMER
NE566	FUNCTION GENERATOR
747	DUAL OPERATIONAL AMPLIFIER
RC4136D	QUAD OPERATIONAL AMPLIFIER
MFC6040	VOLTAGE-CONTROLLED OPERATIONAL AMPLIFIER
8098	HYBRID
8103	HYBRID
8099	HYBRID
9311	ONE-OF-SIXTEEN DECODER/DEMULTIPLEXER
9312	8-INPUT MULTIPLEXER
9314	QUAD LATCH
9316	4-BIT BINARY COUNTER
9321	DUAL ONE-OF-FOUR DECODER
9602	DUAL MONOSTABLE MULTIVIBRATOR
74186	ROM

SECTION 4.

SCHEMATICS, DRAWINGS AND PARTS LISTS

SYM	DESCRIPTION	DRFTG	CHECK	ENGRG
D	REV PER ECN# 1445			

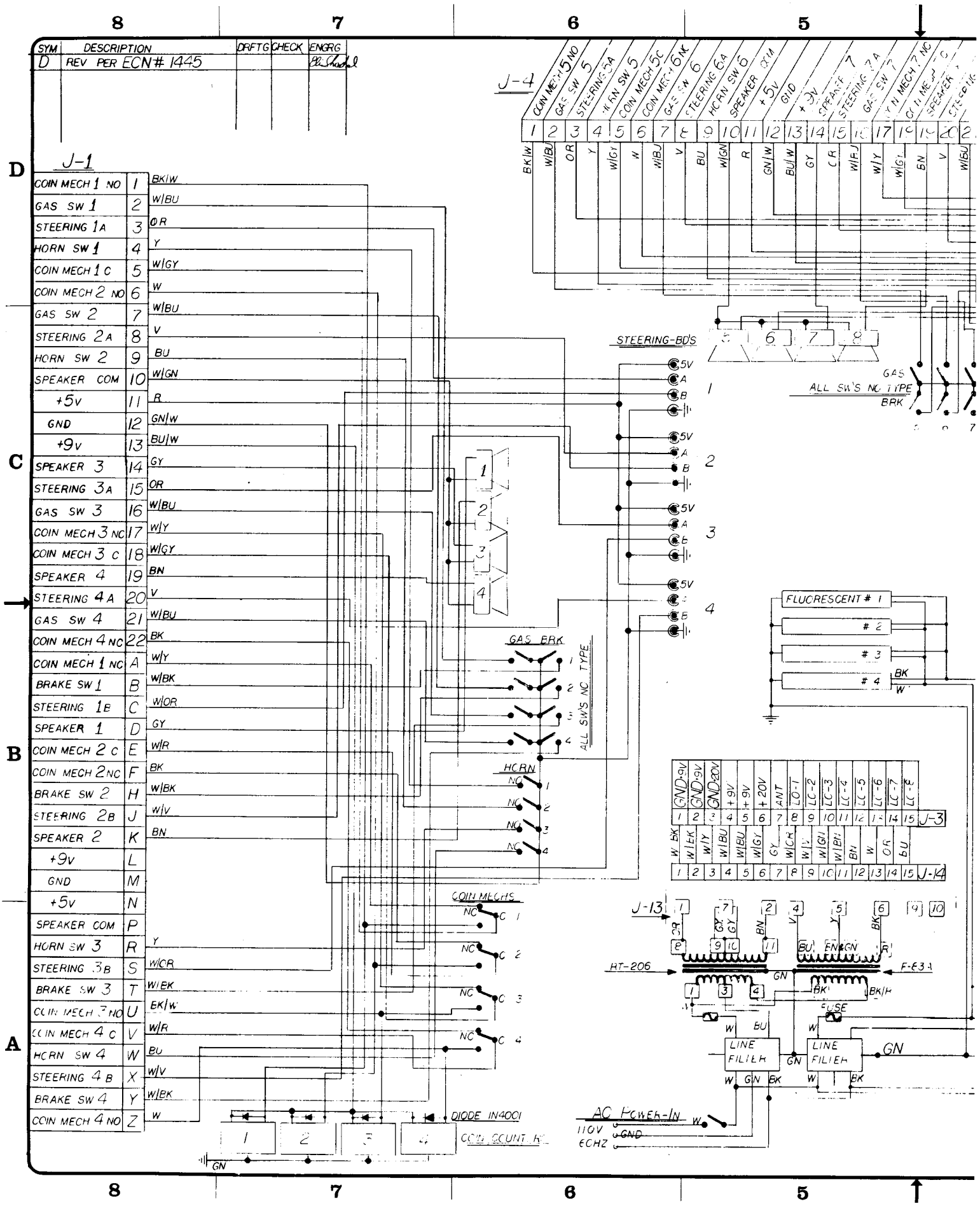

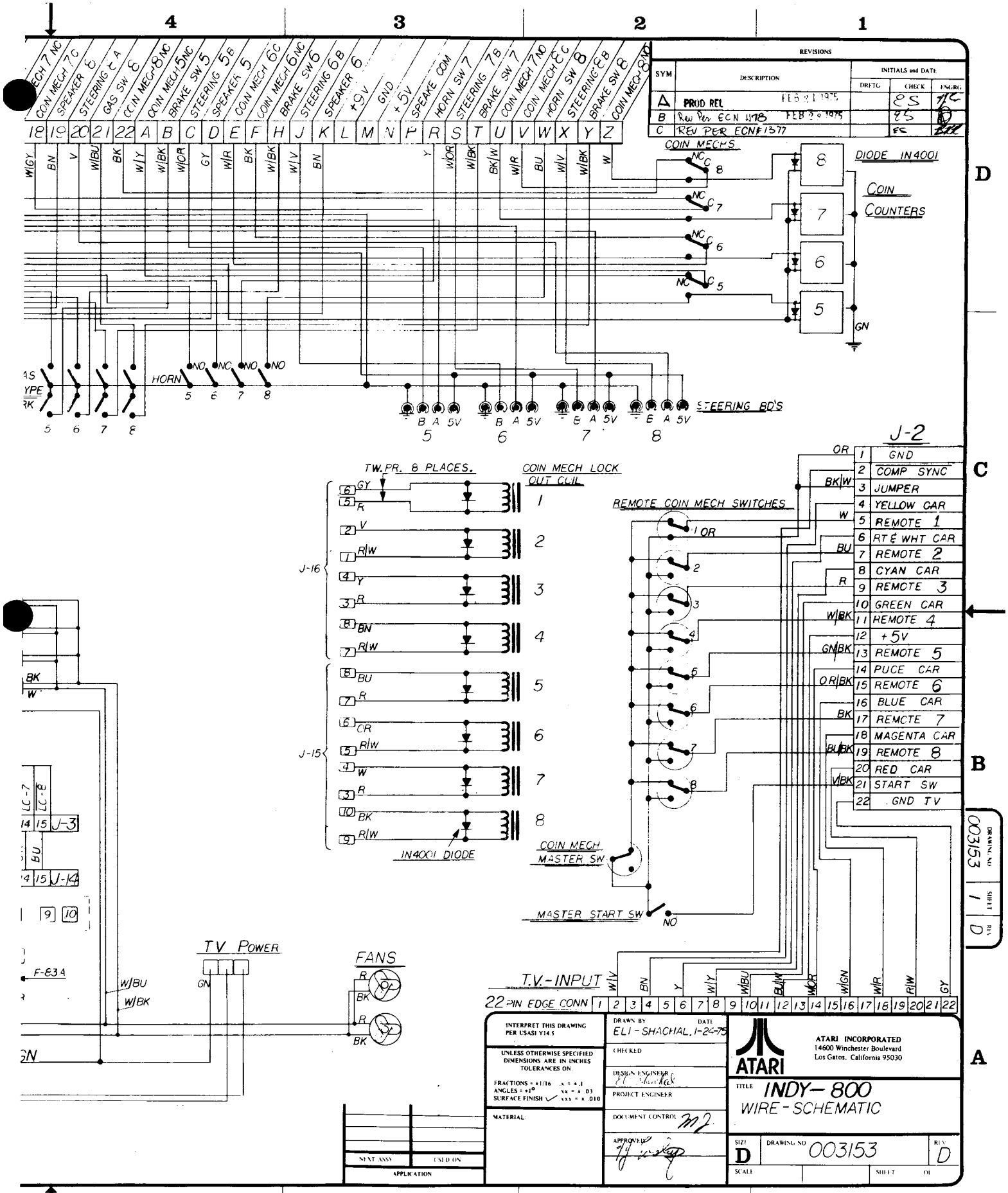
REVISIONS
SYM | DESCRIPTION | INITIALS and DATE | DRFTG | CHECK | ENGRG
A PROD REL FEB 21 1975 ES
B Rev Per ECN 1378 FEB 20 1975 ES
C REV PER ECN#1377 ES
COIN MECH 7 NC
COIN MECH 7 C
SPEAKER 6
STEERING 6 A
GAS SW 6
COIN MECH 8 NC
COIN MECH 5 NC
BRAKE SW 5
STEERING 5 B
SPEAKER 5
COIN MECH 6 C
COIN MECH 6 NC
BRAKE SW 6
STEERING 6 B
SPEAKER 6
+5V
GND
+5V
SPEAKE COIN
HORN SW 7
STEERING 7 B
BRAKE SW 7
COIN MECH 7 NO
COIN MECH 8 C
HORN SW 8
STEERING 8 B
BRAKE SW 8
COIN MECH 8 NO
18 19 20 21 22 A B C D E F H J K L M N P R S T U V W X Y Z
COIN MECHS
DIODE IN4001
COIN COUNTERS
GN
HORN
STEERING BD'S
B A 5V
J-2
1 GND
2 COMP SYNC
3 JUMPER
4 YELLOW CAR
5 REMOTE 1
6 RT & WHT CAR
7 REMOTE 2
8 CYAN CAR
9 REMOTE 3
10 GREEN CAR
11 REMOTE 4
12 +5V
13 REMOTE 5
14 PUCE CAR
15 REMOTE 6
16 BLUE CAR
17 REMOTE 7
18 MAGENTA CAR
19 REMOTE 8
20 RED CAR
21 START SW
22 GND TV
TW. PR. 8 PLACES.
COIN MECH LOCK OUT COIL
J-16
J-15
IN4001 DIODE
REMOTE COIN MECH SWITCHES
COIN MECH MASTER SW
MASTER START SW
NO
TV POWER
FANS
T.V.-INPUT
22 PIN EDGE CONN
DRAWING NO 003153
SHEET 1
REV D
INTERPRET THIS DRAWING PER USASI Y14.5
UNLESS OTHERWISE SPECIFIED DIMENSIONS ARE IN INCHES TOLERANCES ON:
FRACTIONS = ±1/16 .X = ±.1
ANGLES = ±1° .XX = ±.03
SURFACE FINISH .XXX = ±.010
MATERIAL:
DRAWN BY ELI - SHACHAL. 1-24-75
DATE
CHECKED
DESIGN ENGINEER
PROJECT ENGINEER
DOCUMENT CONTROL
APPROVED
NEXT ASSY
USED ON
APPLICATION
ATARI
ATARI INCORPORATED
14600 Winchester Boulevard
Los Gatos, California 95030
TITLE INDY-800
WIRE-SCHEMATIC
SIZE D
DRAWING NO 003153
REV D
SCALE
SHEET OF

ATARI
Innovative leisure

ASSEMBLY TITLE / INDY 800 CABINET TOP - TOP ASSY **P/L** A002970

PARTS LIST SPECIFICATION

Drawn	
Checked	Mech. Eng.
Proj. Eng. Wayne Sautter	Elec. Eng

REV. F

Rev.	Description	Date	Apprv.	Rev.	Description	Date	Apprv.
A	Production Release	2-3-75					
B	Rev per ECN 1112	2-7-75					
C	Rev per ECN 1121	2/11/75					
D	" " " 1130	2/14/75					
E	" " " 1152	2/26/75					
F	" " " 1226	3/17/75					

Item	Part Number	Qty.	DESCRIPTION
1	A002892	REF	Cabinet Top Frame Assy
2			
3	A002942	1	Plexiglass cover - Retainer Assy
4	A003337	1	Car Label & Instruction Card Assy
5	002921-01	3	Long Steel Leg
6	002921-02	1	Long Steel Leg with Detail
7			
8			
9			
10	A002971	4	Control Panel Assy
11	A002975	1	ABS Corner Cap Assy
12	A002976	1	Corner Brkt & Leg Brkt & Control Panel Brkt Assy
13	A002977	2	Top - Tie Down Brkt Assy

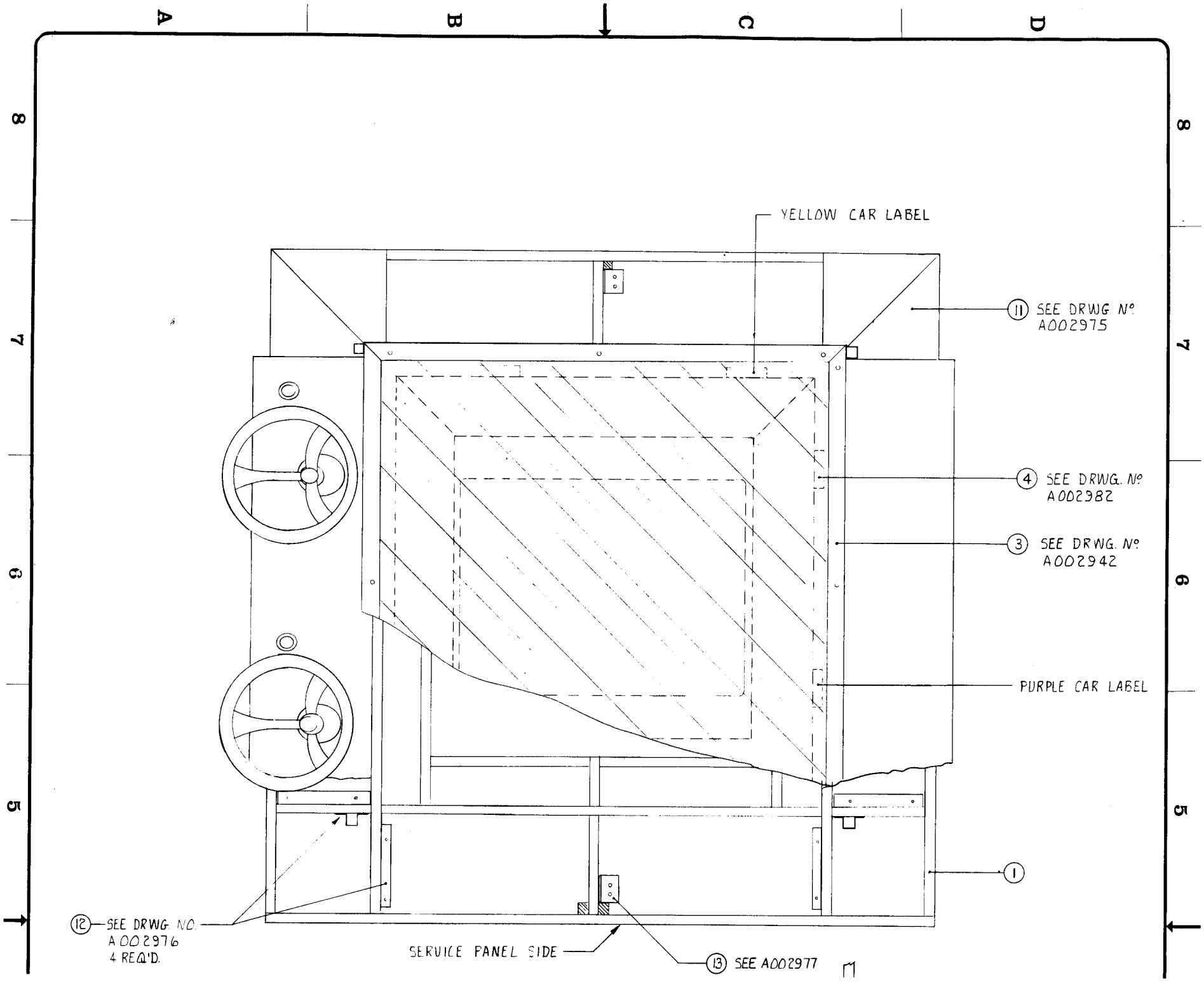
YELLOW CAR LABEL
11 SEE DRWG. Nº A002975
4 SEE DRWG. Nº A002982
3 SEE DRWG. Nº A002942
PURPLE CAR LABEL
1
12 SEE DRWG. NO. A002976 4 REQ'D.
SERVICE PANEL SIDE
13 SEE A002977

REVISIONS				
SYM	DESCRIPTION	INITIALS and DATE		
		DRT'G	CHECK	ENG'RG
E	[illegible]	WS	3-4-75	[illegible]
F	ECN 1226	WS	3-17-75	[illegible]

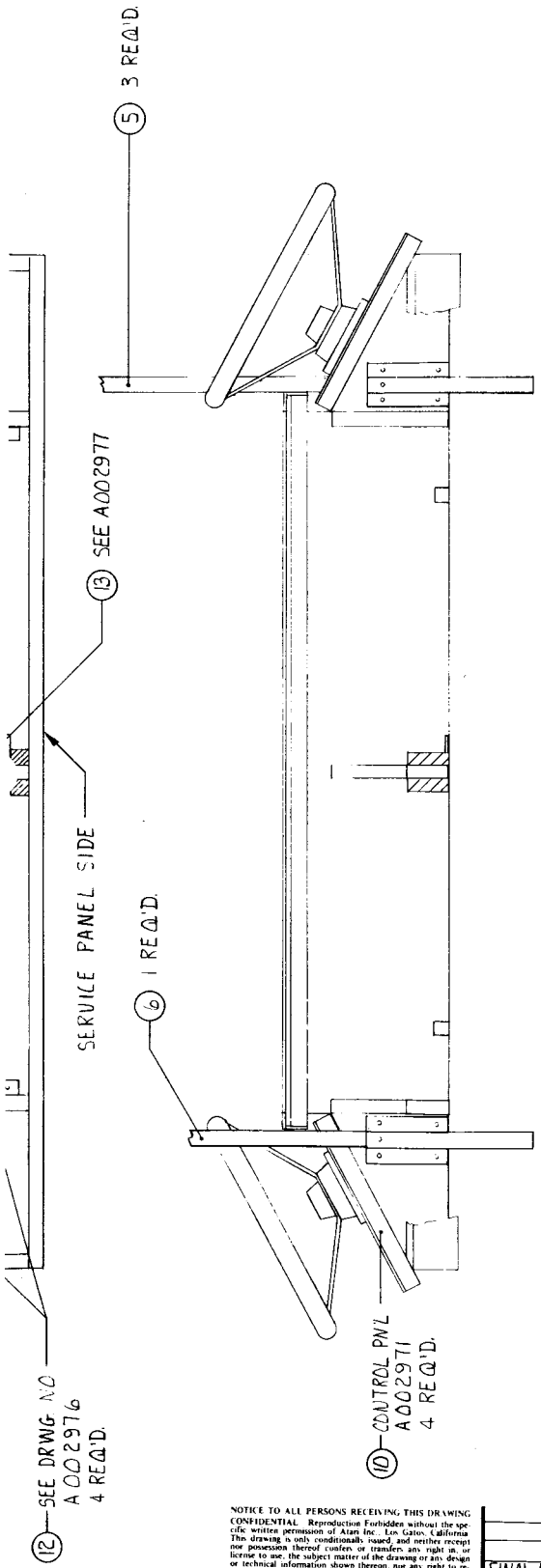

NOTICE TO ALL PERSONS RECEIVING THIS DRAWING CONFIDENTIAL. Reproduction Forbidden without the specific written permission of Atari Inc., Los Gatos, California. This drawing is only conditionally issued, and neither receipt nor possession thereof confers or transfers any right in, or license to use, the subject matter of the drawing or any design or technical information shown thereon, nor any right to reproduce this drawing or any part thereof, except for manufacture by vendors for Atari Incorporated and for manufacture under the corporation's written license, no right to reproduce this drawing is granted or the subject matter thereof unless by written agreement with or written permission from the corporation.

FINAL ASSY	INDY 800
NEXT ASSY	USED ON
APPLICATION	

INTERPRET THIS DRAWING PER USASI Y14.5

UNLESS OTHERWISE SPECIFIED DIMENSIONS ARE IN INCHES TOLERANCES ON
FRACTIONS = ±1/16 X = ±.1
ANGLES = ±1° XX = ±.03
SURFACE FINISH √ XXX = ±.010

MATERIAL

DRAWN BY	WS
DATE	3-4-75
CHECKED	
DESIGN ENGINEER	
PROJECT ENGINEER	K Wayne Suter
DOCUMENT CONTROL	MJ
APPROVED	

ATARI

ATARI INCORPORATED
14600 Winchester Boulevard
Los Gatos, California 95030

TITLE INDY 800
CABINET TOP-TOP ASSY

SIZE	DRAWING NO	REV
D	A002970	F
SCALE None		SHEET OF

DRAWING NO
SHEET
REV

ATARI
Innovative leisure

ASSEMBLY TITLE / INDY 800 TOP DISPLAY TOP ASSY **P/L** A002969

PARTS LIST SPECIFICATION

Drawn		
Checked	Mech. Eng.	
Proj. Eng. Wayne Dauter	Elec. Eng	REV. G

Rev.	Description	Date	Apprv.	Rev.	Description	Date	Apprv.
A	Production Release	2-3-75					
B	Rev per ECN 1112	2-6-75					
C	Rev per ECN 1121	2/11/75					
D	REV PER ECN 1125	2/14/75					
E	Rev per ECN 1242	3/18/75					
F	Rev per ECN 1271	3/25/75					
G	Rev per ECN 1315	4/14/75					

Item	Part Number	Qty.	DESCRIPTION
1	A002929	REF	Display Top - Cabinet Assy
2	A002978-01	2	Top Plex Retainer Assy-Small
3	A002978-02	2	Top Plex Retainer Assy- Large
4	A002981	4	Fluorescent Light Assy
5	A003389-01	2	Bottom Plex Retainer Assy-Small
6	A002979	1	Mirror Plex & ABS Retainer Assy
7	A003305-04	1	Display Top, Sub-Harness
8	A002982	1	Alum. Corner Cap & Shorting Leg Assy
9	A003389-02	2	Bottom Plex Tetainer Assy-Large
10	002939	Ref	Display Top - Cover
11	A002930	4	Plexiglas S/S Layout

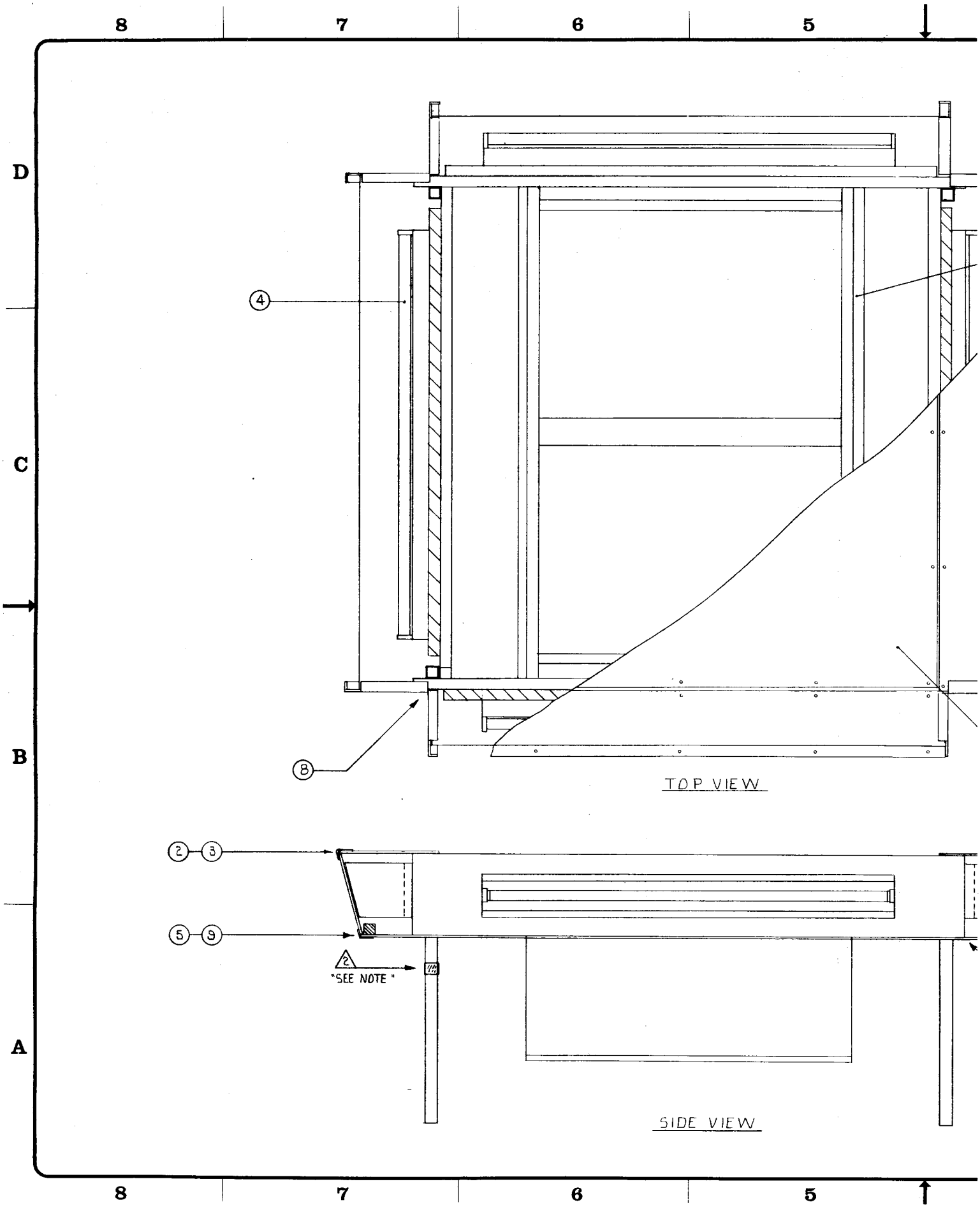
8
7
6
5
D
C
B
A
4
8
TOP VIEW
2
3
5
9
2
"SEE NOTE"
SIDE VIEW

REVISIONS				
SYM	DESCRIPTION	INITIALS and DATE		
		DRFTG	CHECK	ENGRG
D	PROD RPL	WS	3-4-75	
E	REV PER ECN 1242	WS	3-18-75	
F	ECN REVISION 1271	WS	3-25-75	
G	ECN REV # 1315	WS	4-11-75	

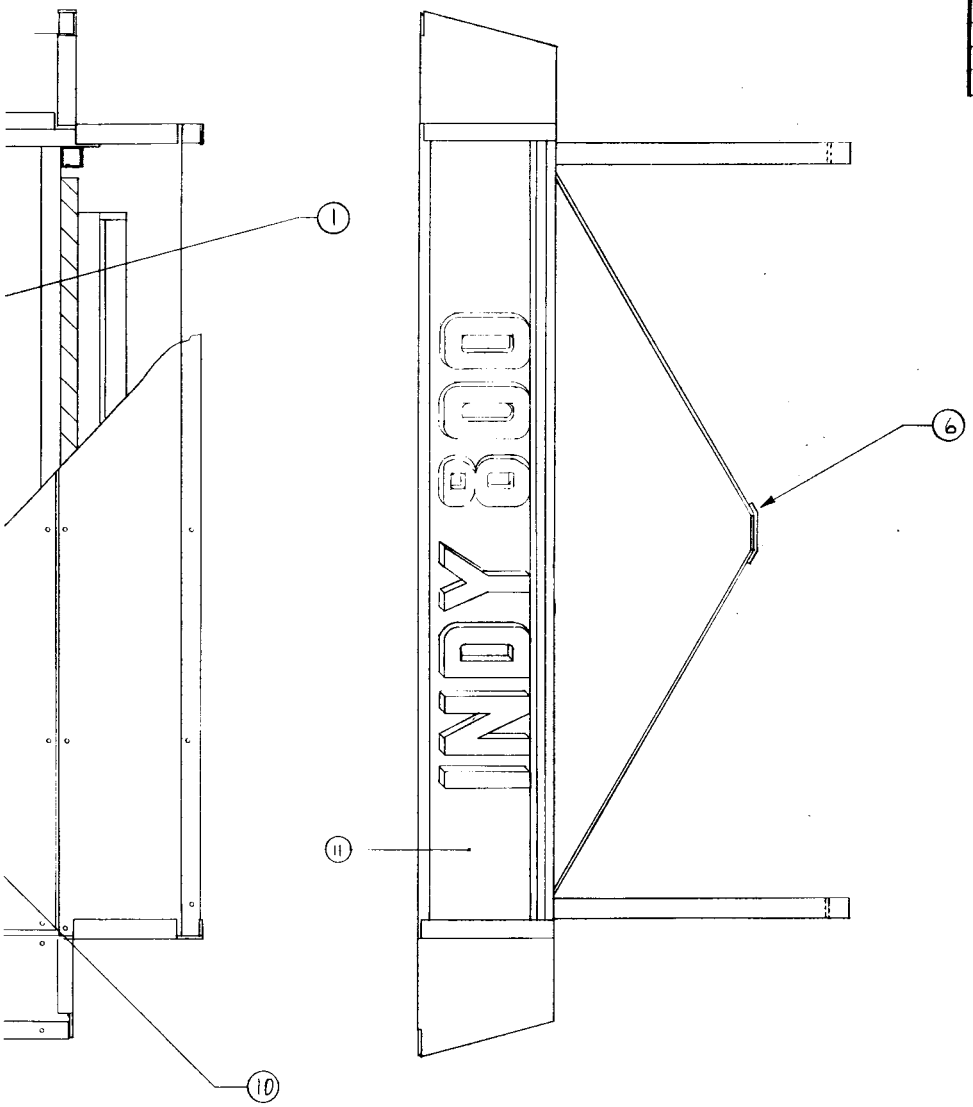

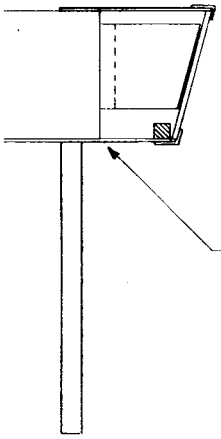

3 NOTE SEE DRWG NO. A002981, SHEET 2OF2, FOR DISPLAY LIGHT HARNESS

2 NOTE: ADD A PIECE OF MASKING TAPE TO SHORT LEG OF DISPLAY TOP, WHICH WILL IDENTIFY LEG, THAT HARNESS IS TO BE LOCATED IN.

1 NOTE: ALL ITEMS EXCEPT, ITEM 10, HAVE A DETAIL ASS'Y DRWG. LISTED ON THE PARTS LIST.

FINAL ASSY	INDY 800
NEXT ASSY	USED ON
APPLICATION	

INTERPRET THIS DRAWING PER USASI Y14.5

UNLESS OTHERWISE SPECIFIED DIMENSIONS ARE IN INCHES TOLERANCES ON

FRACTIONS = ±1/16 x = ±.1
ANGLES = ±1° xx = ±.03
SURFACE FINISH ✓ xxx = ±.010

MATERIAL:

DRAWN BY WS DATE 3-4-75
CHECKED
DESIGN ENGINEER
PROJECT ENGINEER K. Wayne Suter
DOCUMENT CONTROL
APPROVED

ATARI INCORPORATED
14600 Winchester Boulevard
Los Gatos, California 95030

TITLE INDY 800
DISPLAY TOP - TOP ASSY

SIZE D DRAWING NO A002969 REV G
SCALE None SHEET 1 OF 1

DRAWING NO. SHEET REV

ASSEMBLY TITLE / INDY 800 - BASE CABINET TOP ASSY P/L 002967

ATARI
Innovative leisure

PARTS LIST SPECIFICATION

Drawn	
Checked	Mech. Eng.
Proj. Eng. Wayne Sauter	Elec. Eng

REV. I

Rev.	Description	Date	Apprv.	Rev.	Description	Date	Apprv.
A		2/3/75		H	Rev per ECN 1289	4-3-75	
B	Rev per ECN 1112	2/6/75		I	Rev per ECN 1448	5/22/75	
C	Rev per ECN 1121	2/11/75					
D	" " " 11	2-14-75					
E	" " " 1153	2/26/75					
F	" " " 1218	3/17/75					
G	" " " 1260	3/24/75					

Item	Part Number	Qty.	DESCRIPTION
1	A002913	REF	Base Cabinet Assy
2	A003332	4	Coin Door Assy
3	A002960	8	Speaker Assy
4	A003427	2	Cooling Fan Assy
5	003486	4	ABS. Water Protective Shield
6	002958	4	Corner Protective Brackets
7	A002990	1	Main Harness, Installation Assy
8			
9	A002955	1	PCB Rack Assy
10	A002947	8	Foot Pedal Mounting Assy
11	003826-01	1	Dust Filter Foam
12	003826-02	4	Dust Filter Foam
13	75-5120N	24	#10-24 x 1¼ Carriage Bolts
14	75-014C	24	#10 Flat Washers
15	75-911S	24	#10 Hex Nuts
16	A002985-01	1	Coin Housing, Speaker, Harness, Installation
17		1	
18	A002985-02	3	Coin Housing Harness Installation
19	73-77003	24	3/16 Dia. Alum. Pop-Rivets (Protective Brkts)
20	72-1516S	16	¼-20 x 1" Mach. Scr. Pan Hd. Philips
21			
22			
23	A002968	1	T.V. Stand Assy
24	A002991	1	Remote Control Box Assy

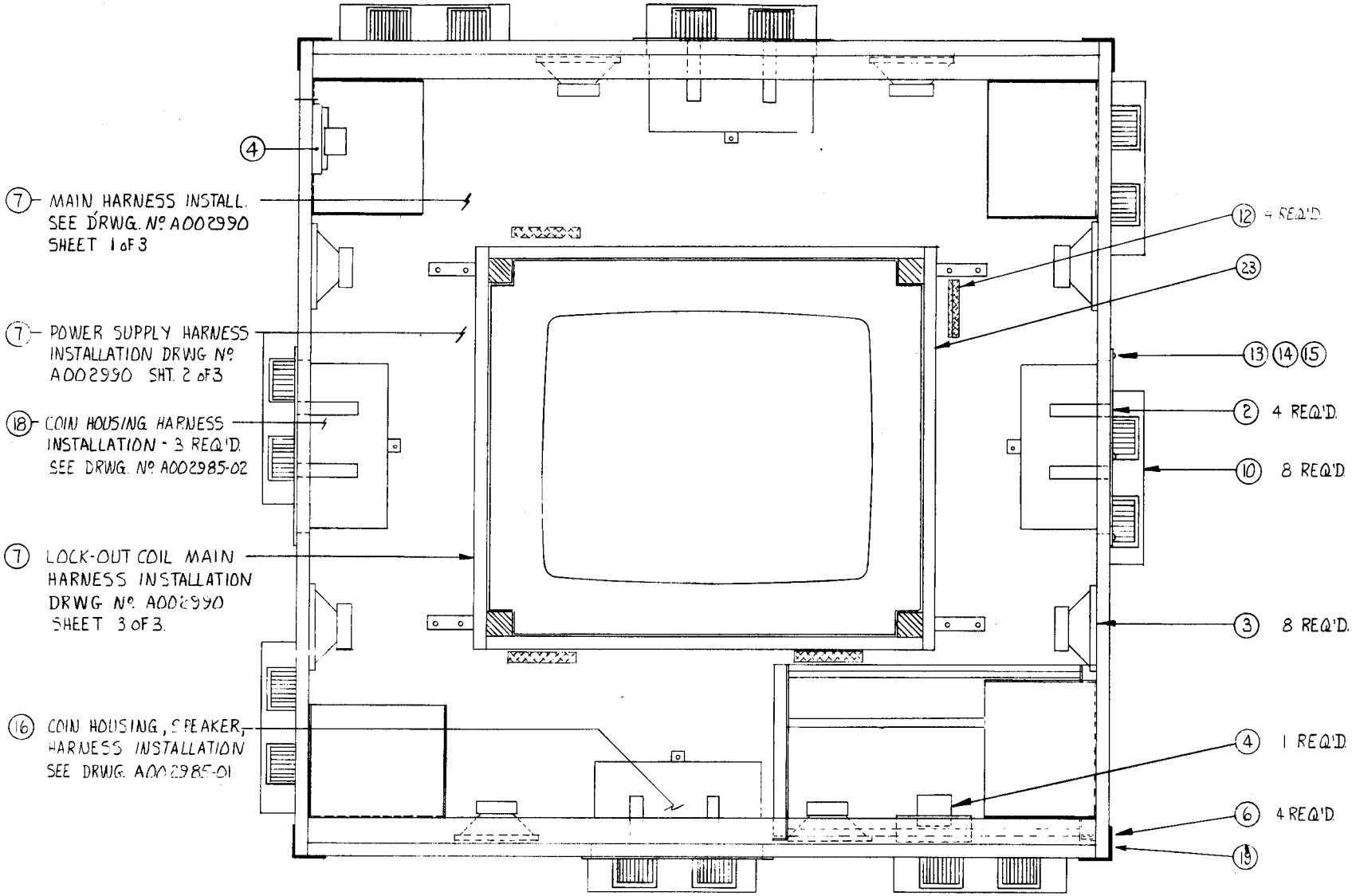
4
7 MAIN HARNESS INSTALL.
SEE DRWG. Nº A002990
SHEET 1 of 3
7 POWER SUPPLY HARNESS
INSTALLATION DRWG Nº
A002990 SHT. 2 of 3
18 COIN HOUSING HARNESS
INSTALLATION - 3 REQ'D.
SEE DRWG. Nº A002985-02
7 LOCK-OUT COIL MAIN
HARNESS INSTALLATION
DRWG Nº A002990
SHEET 3 of 3.
16 COIN HOUSING, SPEAKER,
HARNESS INSTALLATION
SEE DRWG. A002985-01
12 4 REQ'D.
23
13 14 15
2 4 REQ'D.
10 8 REQ'D.
3 8 REQ'D.
4 1 REQ'D.
6 4 REQ'D.
19

TOP VIEW

REVISIONS				
SYM	DESCRIPTION	INITIALS and DATE		
		DRF'G	CHECK	ENG'RG
E	[illegible]	WS	3-4-75	[illegible]
F	ECN 1218	WS	3-17-75	[illegible]
G	ECN 1260	WS	3-24-75	[illegible]
H	ECN 1289	WS	4-3-75	[illegible]
I	[illegible]	[illegible]	[illegible]	[illegible]

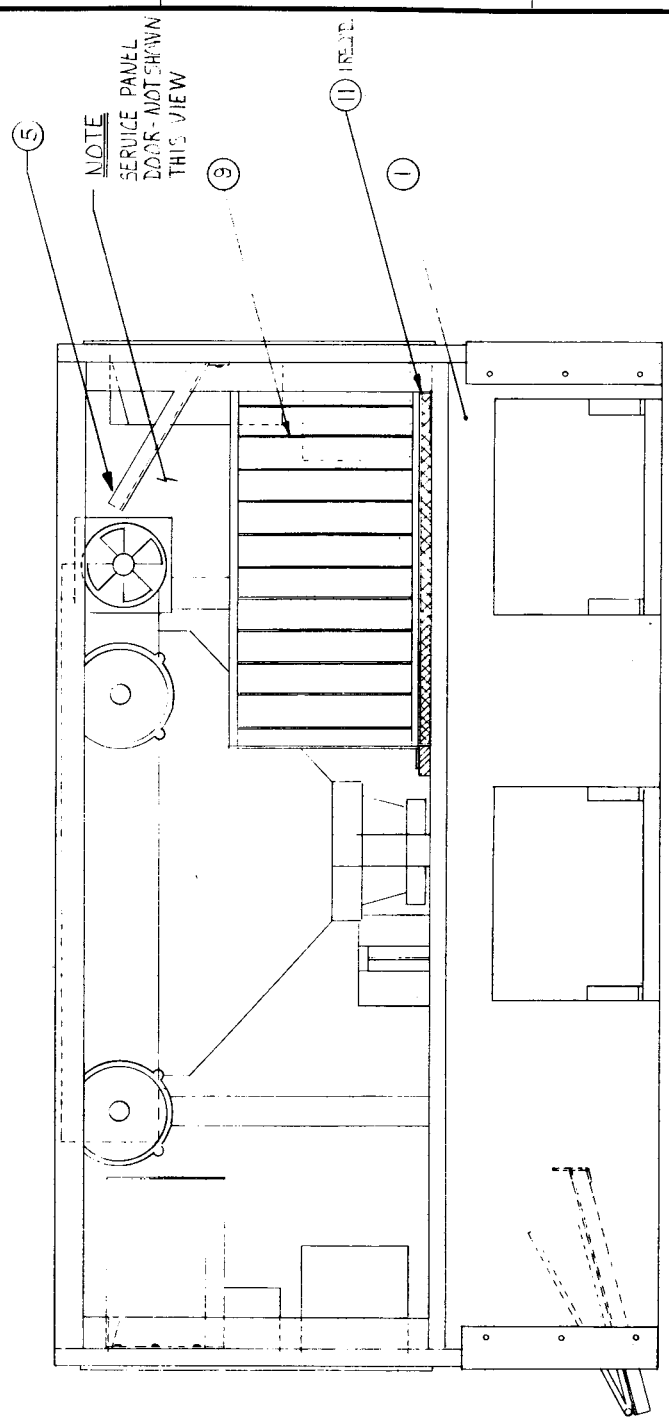

SERVICE PANEL SIDE
SIDE VIEW

FINAL ASSY	INDY 800
NEXT ASSY	USED ON
APPLICATION	

INTERPRET THIS DRAWING PER USASI Y14.5

UNLESS OTHERWISE SPECIFIED DIMENSIONS ARE IN INCHES TOLERANCES ON:
FRACTIONS = ±1/16 .X = ±.1
ANGLES = ±1° .XX = ±.03
SURFACE FINISH ✓ .XXX = ±.010

MATERIAL

DRAWN BY: WS DATE: 3-4-75
CHECKED
DESIGN ENGINEER
PROJECT ENGINEER: K Wayne Santa
DOCUMENT CONTROL
APPROVED

ATARI INCORPORATED
14600 Winchester Boulevard
Los Gatos, California 95030

TITLE: INDY 800
BASE CABINET-TOP ASSY

SIZE: D | DRAWING NO: A002967 | REV: I
SCALE: None | SHEET 1 OF 1

DRAWING NO | SHEET | REV

ATARI
Innovative leisure

ASSEMBLY TITLE / INDY 800 CARD RACK ASSY **P/L** 002955

PARTS LIST SPECIFICATION

Drawn	
Checked MJ 2/26/75	Mech. Eng. R. Kalbus
Proj. Eng. Dave Sinter	Elec. Eng

REV. C

Rev.	Description	Date	Apprv.	Rev.	Description	Date	Apprv.
A	PROD REL	2/18/75					
B	Rev per ECN 1277	3/26/75					
C	" " " 1313	4/11/75					

Item	Part Number	Qty.	DESCRIPTION
1	78-0901	1	Card Rack Kit CR 2966
2	78-0902	2	Connector Support Rail CR 1407
3	72-6612	4	Self-Tapping Screws, #6 x 3/4 Pan Head Sht. Mtl.
4	002974-01	1	Angle Brkt.
5	002974-02	1	Angle Brkt.
6	A003000	8	Car Board
7	A003184	1.	Coin Control Board
8	A003170	1	Score Board
9	A003182	1	Sync Board
10	A003199	1	Back Plane P.C. Board
11	003517	4	Back Plane Board - Support Bar
12	003518	4	Fish. Paper, Insulator
13			

MFR. PART Nº	DESCRIPTION	QTY.
CR2966	CARD RACK KIT:	
	INCLUDES:	
	1. COMBO SUPPORT RAILS & GUIDES	2
	2. END PLATES	2
	3. 6 x ½ SCREWS	8
	4. M3 SCREWS. HEX	A/R
	5. M3 NUTS	A/R
	6. M3 WASHERS	A/R.
CR1407	CONNECTOR SUPT. RAIL	2

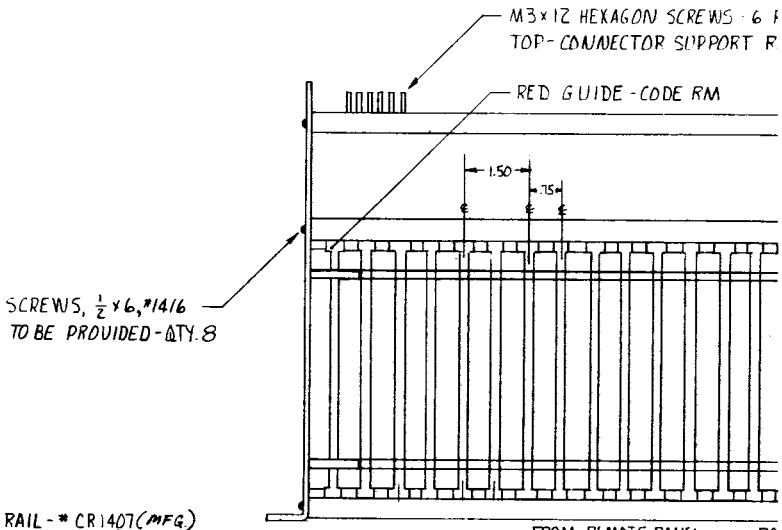

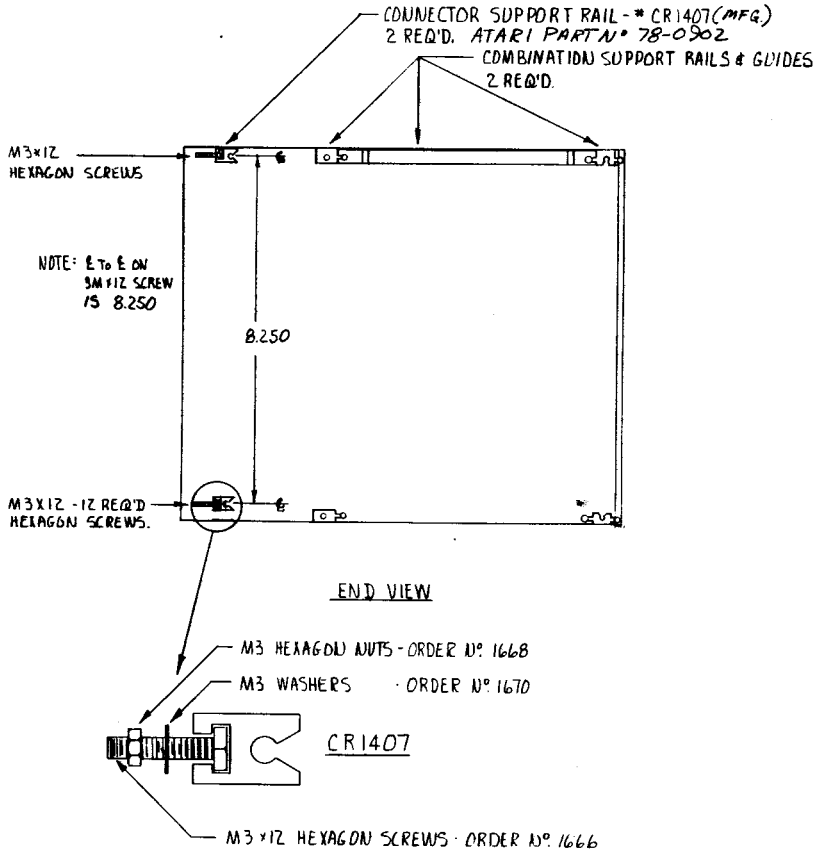

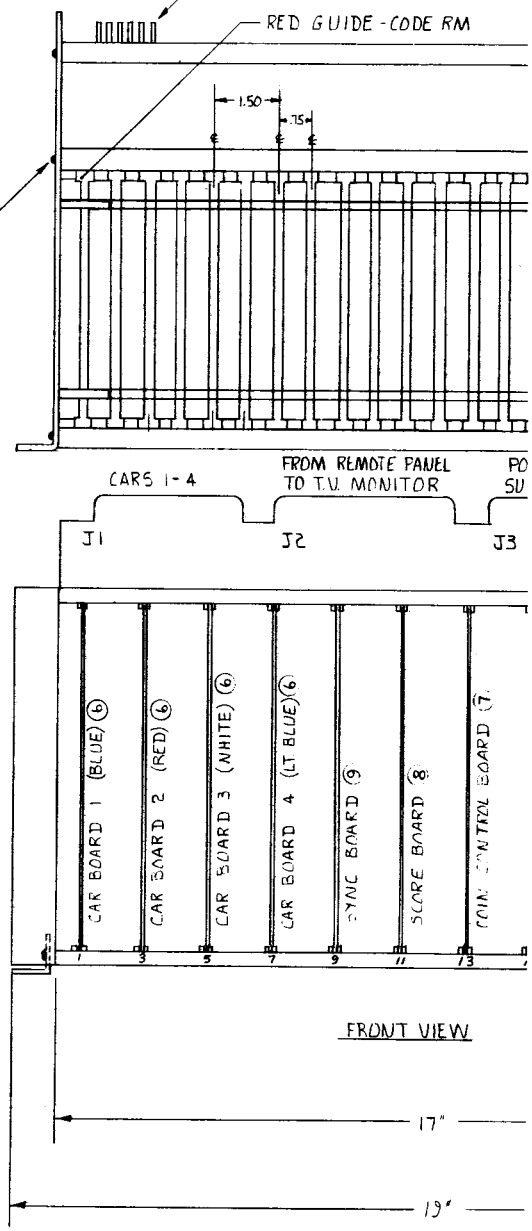

NOTE: NUTS & WASHERS TO BE PROVIDED WITH M3 x 12 HEX. SCR.

REVISIONS				
SYM	DESCRIPTION	INITIALS and DATE		
		DRFTG	CHECK	ENGRG
A	PROD. REL	WS	2-10-75	
B	ECN 1277	WS	3-27-75	
C	ECN 1313	WS	4-11-75	

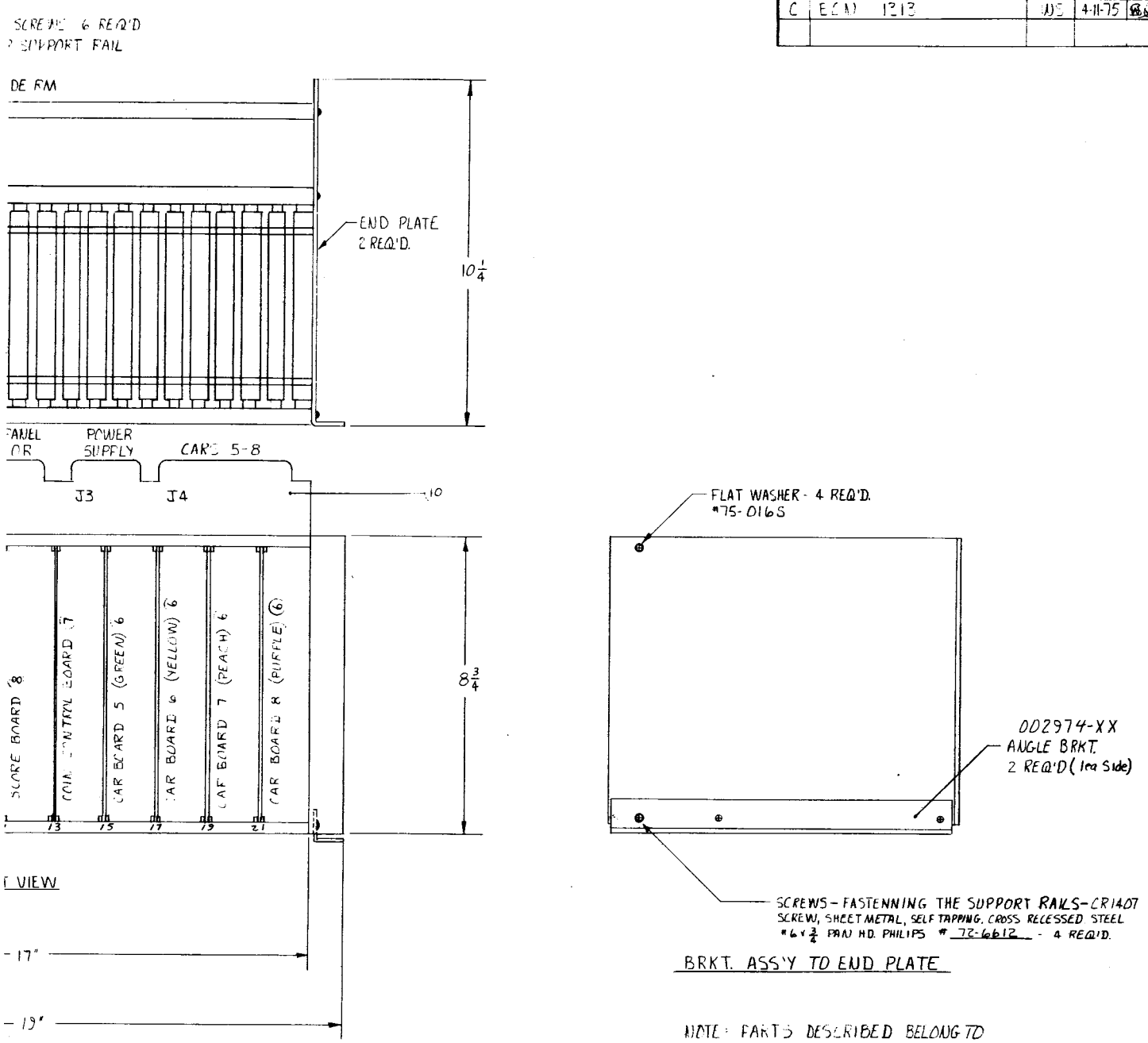

BRKT. ASS'Y TO END PLATE

NOTE: PARTS DESCRIBED BELONG TO E.E.C.O

INDY 800	
NEXT ASSY	USED ON
APPLICATION	

INTERPRET THIS DRAWING PER USASI Y14.5

UNLESS OTHERWISE SPECIFIED DIMENSIONS ARE IN INCHES TOLERANCES ON
FRACTIONS = ± 1/16 .X = ± .1
ANGLES = ± 1° .XX = ± .03
SURFACE FINISH ✓ .XXX = ± .010

MATERIAL

DRAWN BY WS.	DATE 2-7-75	
CHECKED		
DESIGN ENGINEER		
PROJECT ENGINEER		
DOCUMENT CONTROL		
APPROVED		

ATARI

ATARI INCORPORATED
14600 Winchester Boulevard
Los Gatos, California 95030

TITLE
INDY 800
P.C. BD RACK ASSY

SIZE	DRAWING NO	REV
D	A002955	C
SCALE 1:2		SHEET 1 OF 2

ATARI

Job Title: RACETRAK STEERING PCB ASSY

Dwg. P/L 000607

Parts List Specification

sheet 1 of 1

Drawn		
Checked	Mech. Eng.	Rev.
Proj. Eng.	Elec. Eng.	
		M

Rev.	Description	Apprv.	Rev.	Description	Apprv.
H	Redesigned	5-6-74			
J	Rev per ECN 397 5/28/74				
K	Rev per ECN 457 6/3/74				
L	Rev per ECN 601 7/15/74				
M	Rev per ECN 1531				

Item	Part. No.	Qty.	Description
1	000614	1	Printed Circuit Board (E)
2	001092	1	Light Mount
3	001151	Ref	Schematic Diagram
4	11750/10-5750	2	Resistor, Comp., 75 ohm, ¼ watt, 5%
5	11471/10-5471	4	Resistor, Comp, 470 ohm, ¼ watt, 5%
6	11332/10-5332	2	Resistor, Comp, 3.3Kohm, ¼ watt, 5%
7	34104 /27-101103	2	Capacitor, Ceramic, .01uf
8	70006/38-2N5777	2	Transistor, 2N 5777 (Photo Darlington)
9	70000/34-2N3643	2	Transistor, 2N 3643
10	71008/38-ME7124	2	Light Emitting Diode, I.R. ME 7124
11			
12			
13			
14	80089 /79-58005	1	Connector, 10 pin, PC Mount, Amp #1-380991
15	72-1212S	1	Screw, Machine, Pan Head Phil, #2-56 x 3/4 Lg.
16	75-042	1	Washer, Split Lock #2
17	75-912S	1	Nut, Hex, #2-56
18	003749	1	Retainer, Led Light Mount

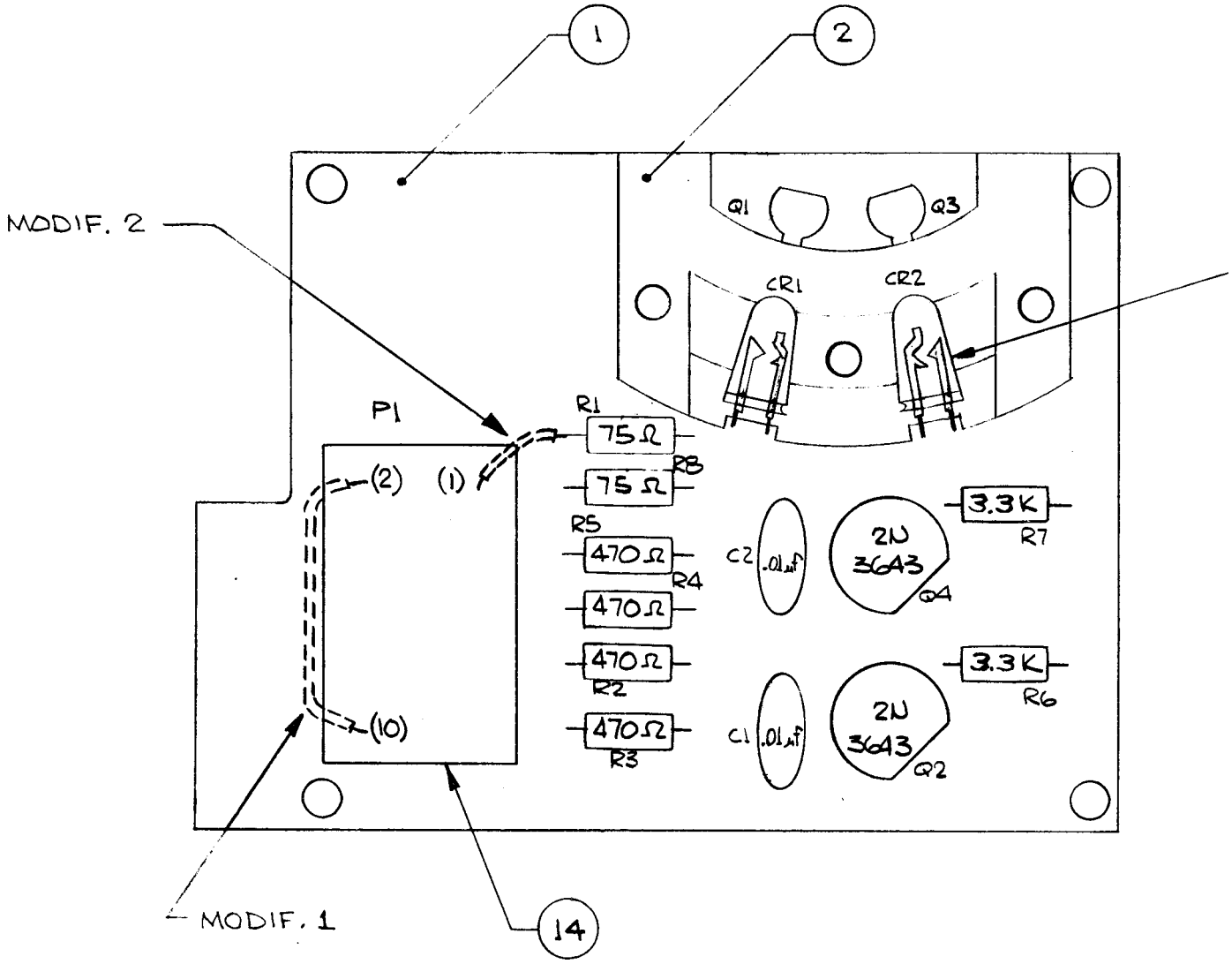

REFER TO SCHEMATIC 001151

A000598	A0
NEXT ASSY	

2 1

REVISIONS

SYM	DESCRIPTION	INITIALS and DATE		
		DRFTG	CHECK	ENGRG
H	REDESIGNED	5-3-74		
J	REV. PER ECN 397	5-28-74		
K	REV. PER ECN 457	6-3-74		
L	REV PER ECN 601	7-16-74		
M	REV PER ECN 1531	7/8/75		

(10) 2 PLACES

MODIFICATIONS: FOR 000614 REV J P.C. BOARDS

1. JUMPER FROM PIN 2 TO PIN 10 OF THE 10 PIN CONNECTOR, ON CIRCUIT SIDE OF BOARD.
2. JUMPER FROM PIN 1 OF THE 10 PIN CONNECTOR TO THE PAD MARKED +5V (END OF R1) ON CIRCUIT SIDE OF BOARD.

MODIFICATIONS: FOR 000614 REV K P.C. BOARDS.

1. JUMPER FROM PIN 2 TO PIN 10 OF THE 10 PIN CONNECTOR, ON CIRCUIT SIDE OF BOARD.

INTERPRET THIS DRAWING PER USASI Y14.5

UNLESS OTHERWISE SPECIFIED DIMENSIONS ARE IN INCHES TOLERANCES ON:

FRACTIONS = ±1/16 .x = ±.1
ANGLES = ±1° .xx = ± .03
SURFACE FINISH ✓ .xxx = ± .010

MATERIAL:

SEE PL 000607

DRAWN BY DC DATE 5-6-74

CHECKED

DESIGN ENGINEER

PROJECT ENGINEER

DOCUMENT CONTROL

APPROVED 5/21/74

ATARI INCORPORATED
14600 Winchester Boulevard
Los Gatos, California 95030

TITLE
ASSEMBLY STEERING BOARD

SIZE B DRAWING NO A000607 REV M

SCALE 2:1 SHEET 1 OF 1

98	A000519
	USED ON
APPLICATION	

2 1

ATARI
Innovative leisure

ASSEMBLY TITLE / INDY 800 STEERING WHEEL ASSY **P/L** 000598-02

PARTS LIST SPECIFICATION

Drawn	
Checked	Mech. Eng.
Proj. Eng.	Elec. Eng

REV. G

Rev.	Description	Date	Apprv.	Rev.	Description	Date	Apprv.
A	PROD REL	2/6/75					
G	ECN 1131	2/14/75					

Item	Part Number	Qty.	DESCRIPTION
1	000598	Ref	Steering Wheel Assy (3201-3803)
2	002133	1	Cover, Kee Games Insigna
3	000605	1	Housing (3201-3545)
4	000606	1	Shaft (3201-3544)
6	72-7512	3	Screw, Mach, Fil. Hd, Phil #4-20 x 3/4 Lg.
7	A000607	1	Printed Circuit Assy
8			
9	75-07002	2	Washer, Fender, ¼
10			
11	76-042020	1	Bearing, Thompson (20L20-F)
12	76-041010	1	Bearing, Thompson (10L10-F)
13	78-40102	1	Steering, Wheel 10"
14	75-945N	1	Nut, #4-20, Nylon Lock
15	72-9580	1	Screw, Mach, Truss Hd, Slotted #4-20 x 5 Lg.
16	000616	1	Hub Light
17	75-055	1	Washer, ¼" Int. Tooth, Starlock
18	78-16002	A/R	Silicone Grease, Compound #5
19	73-1208	2	MACH SCR. 256 x 1/2 PAN HD PH.

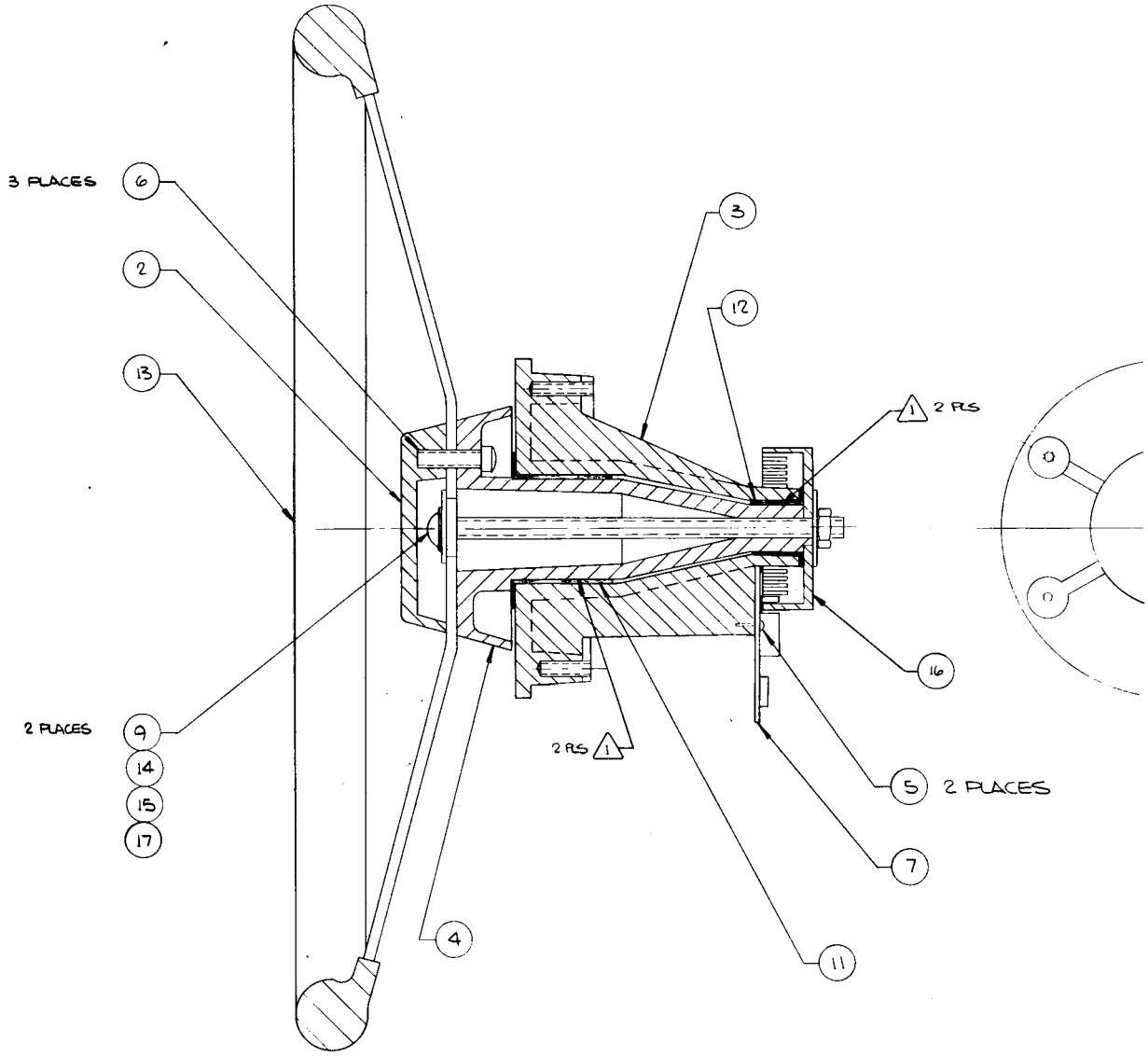

NOTES:

1. APPLY LIGHT FILM OF SILICONE GREASE #5 COMPOUND (OR EQUIV.) ON AREAS INDICATED. (ITEM 18)

2. VENDOR PART NO. 3201-3803

REVISIONS				
SYM	DESCRIPTION	INITIALS and DATE		
		DRFTG	CHECK	ENGRG
A	RELEASED FOR PROD	3-20-74		
B	REVISED PER ECN	3-21-74		
C	REVISED PER ECN 230	4-4-74		
D	REVISED PER ECN 270	4-4-74		
E	REVISED PER ECN 379	5-17-74		
F	REVISED PER ECN 526	6-19-74		
G	ECN 1131	2-14-75	WS	

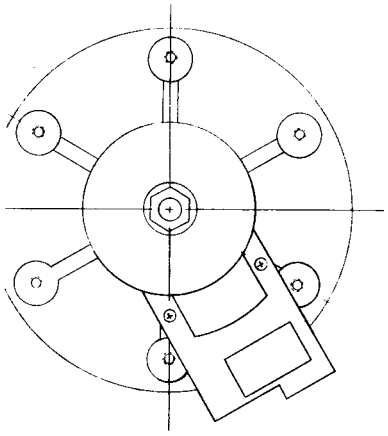

ES

NOTE:

000598-01 - AS SHOWN

000598-02 - OMIT PART N° 78-40101 ADD 78-40102

OMIT " " 000599 ADD 002133

NEXT ASSY	USED ON
A002947	INDY 800
A000523	A000519

APPLICATION

INTERPRET THIS DRAWING PER USASI Y14.5

UNLESS OTHERWISE SPECIFIED DIMENSIONS ARE IN INCHES TOLERANCES ON:

FRACTIONS = ±1/16 x = ±.1
ANGLES = ±1° xx = ±.03
SURFACE FINISH xxx = ±.010

MATERIAL: SEE PL 000598

DRAWN BY: L.C. DATE: 11-19-73

CHECKED: 4-10-74

DESIGN ENGINEER

PROJECT ENGINEER

DOCUMENT CONTROL

APPROVED

ATARI INCORPORATED
14600 Winchester Boulevard
Los Gatos, California 95030

TITLE: ASSEMBLY, STEERING WHEEL

SIZE: D | DRAWING NO: A000598-XX | REV: G

SCALE: — | SHEET 1 OF 1

DRAWING NO: A000598 | SHEET 1 | REV: 5

ATARI

Sub Title: FOOT PEDAL ASSY

Dwg. P/L 000589

Parts List Specification

sheet 1 of 1

Drawn	Patty		
Checked		Mech. Eng.	Rev.
Proj. Eng	(PW) 3/20/74	Elec. Eng.	G

Rev.	Description	Apprv.
A	Release for Production	(PW) 3/20/74
B	Revise per ECN	(PW) 8-21-74
C	Rev per ECN 229	4-4-74
D	Rev per ECN 382	5-20-74
E	Rev per ECN 442	5/28/74
F	Rev per ECN 460	6-6-74
G	REV. PER ECN 969	12-3-74

Item	Part. No.	Qty.	Description
1	A000589	Ref	Foot Pedal Assy (3201-3555)
2	000590	1	Foot Pedal (3201-3533)
3	000591	1	Pedal Foot (3201-3534)
4	000592	1	Spring (3201-3550)
5	000593	1	Bumper (3201-3551)
6	000594	1	Stop Washer (3201-3552)
7			
8	000597	1	Bearing Block (3201-3549)
9			
10			
11	75199/72-1508S	1	Screw, mach., Pan Hd, Phil #¼-20 x ½ lg
12			
13			
14	75-7002/75409	1	Washer, Fender ¼
15			
16			
17	83268	A/R	Silicone Grease Compound #5
18	84012	A/R	Contact Cement

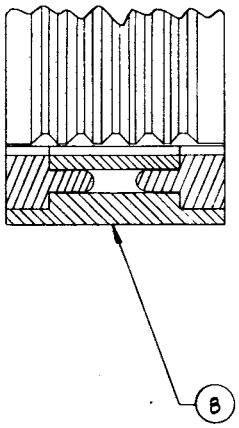

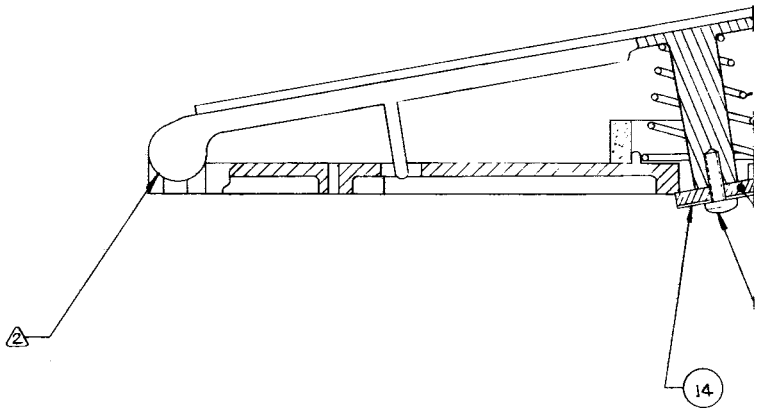

NOTES:

1. TACK ITEM 5 TO ITEM 3 WITH 3M1357 CONTACT ADHESIVE.

2. APPLY LIGHT SMEAR SILICONE GREASE #5 COMPOUND (OR EQUIV.) ON AREAS INDICATED. (ITEM 18)

REVISIONS				
SYM	DESCRIPTION	INITIALS and DATE		
		DRFTG	CHECK	ENGRG
A	RELEASED FOR PROD	3-20-74		
B	PER ECN 194			
C	REVISED PER ECN 229	4-5-74	DCook	
D	REVISED PER ECN 382	5-20-74		
E	REVISED PER ECN 442	5-28-74		
F	REVISED PER ECN 460	6-6-74		
G	REVISED PER ECN 969	12-5-74		

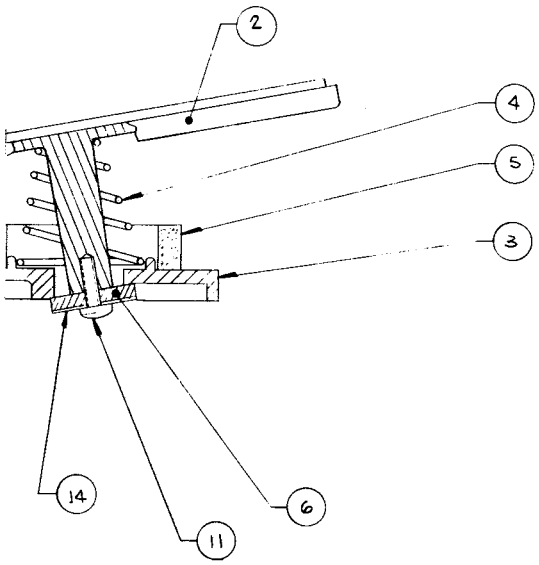

DRAWING NO A000589 SHEET 1 REV G

INTERPRET THIS DRAWING PER USASI Y14.5

UNLESS OTHERWISE SPECIFIED DIMENSIONS ARE IN INCHES TOLERANCES ON:
FRACTIONS = ±1/16 x = ±.1
ANGLES = ±1° xx = ±.03
SURFACE FINISH xxx = ±.010

MATERIAL: SEE W/L A000589

DRAWN BY J.S. DATE 11-19-73
CHECKED DCook
DESIGN ENGINEER 4/5/74
PROJECT ENGINEER 3/26/74
DOCUMENT CONTROL 4/9/74
APPROVED

ATARI INCORPORATED
14600 Winchester Boulevard
Los Gatos, California 95030

TITLE ASSEMBLY FOOT PEDAL

SIZE D DRAWING NO A000589 REV G
SCALE — SHEET 1 OF 1

NEXT ASSY	USED ON
A002971	INDY 800
A001022	A000519

APPLICATION

ASSEMBLY INSTRUCTIONS

STEP 1. MOUNT CABINET TOP A002970 TO CABINET BASE A002967

NOTE: BLUE CAR LABEL ON CABINET TOP ASS'Y MUST BE PLACED OVER PC BOARD RACK AREA IN BASE CABINET ASS'Y

NOTE: SEE DETAIL "B", SHEET 2, FOR MOUNTING ASS'Y OF CABINET TOP TO BASE.

STEP 2. INSERT FOUR STEEL LEGS INTO BRACKETS ATTACHED TO TOP

NOTE: EACH STEEL LEG HAS DETAIL HOLES THAT MATCH HOLES IN BRACKETS ON CABINET TOP. SEE DETAIL "C"

STEP 3. PLACE DISPLAY TOP ONTO STEEL LEGS MATCHING HOLES ON THE SHORT LEGS WITH THOSE ON THE LONG STEEL LEGS.

NOTE: SHORT STEEL LEG, IDENTIFIED WITH A PIECE OF TAPE MUST BE PLACED ON LONG STEEL LEG DIRECTLY ABOVE POWER SUPPLY BOARD IN CABINET BASE.

STEP 4. REMOVE COVER AND ONE ABS TOP PANEL FROM DISPLAY TOP ASS'Y, TO LOCATED DISPLAY TOP HARNESS THAT PASSES THROUGH MARKED STEEL LEG TO CONNECTION IN THE BASE. SEE DETAIL "A". REPLACE COVERS AFTER HARNESS IS CONNECTED.

STEP 5. CAREFULLY LOCATE MOUNTING HARDWARE THROUGH DETAIL HOLES IN LEGS. SEE DETAIL "C" AND "D"

NOTE: MOUNTING HARDWARE, DETAIL "C" REMOVE CONTROL PANEL ASS'Y FOR EASY ACCESS.

STEP 6. CONNECT ALL HARNESS BY OPENING COIN DOORS FOR EASY ACCESS.

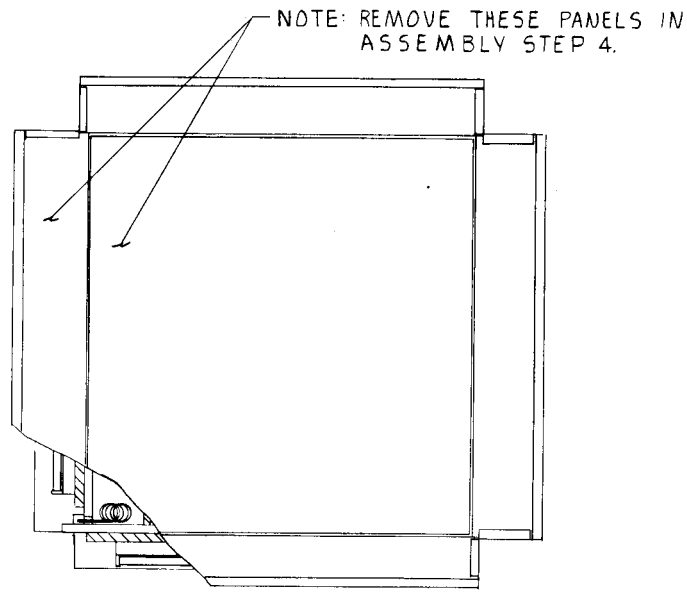

TOP VIEW OF DISPLAY TOP ASS'Y.

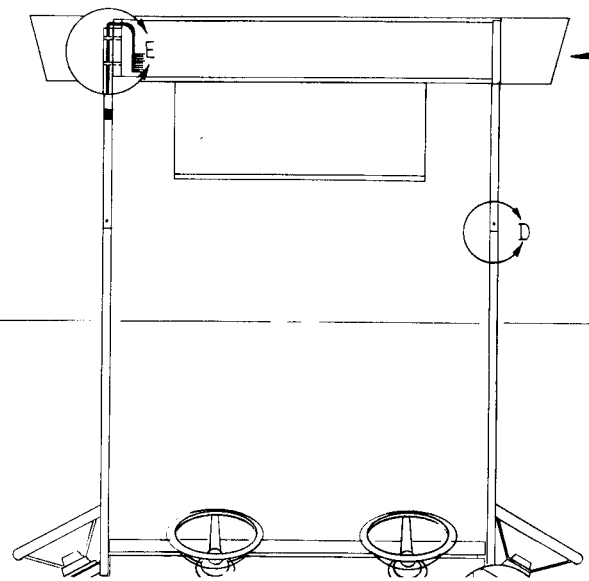

REVISIONS				
SYM	DESCRIPTION	INITIALS and DATE		
		DRFTG	CHECK	ENGRG
A	PROD. REL.	WS	3-5-75	
B.	E.C.N. 1314	WS	4-11-75	

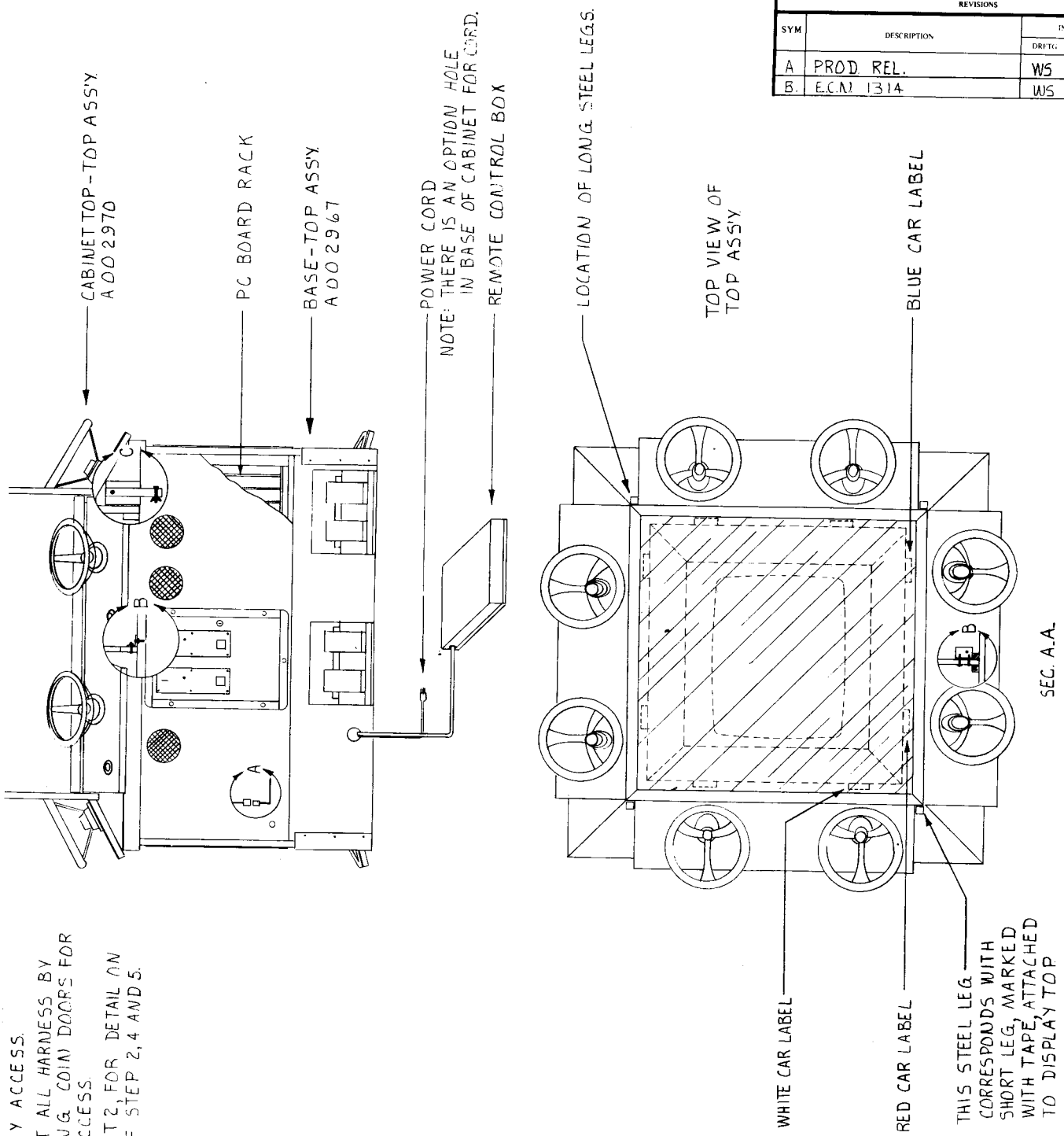

STEP 6. FOR EASY ACCESS. CONNECT ALL HARNESS BY OPPENING COIN DOORS FOR EASY ACCESS.

NOTE: SEE SHEET 2, FOR DETAIL ON ASS'Y OF STEP 2, 4 AND 5.

NEXT ASSY	USED ON
	INDY 800
APPLICATION	

INTERPRET THIS DRAWING PER USASI Y14.5

UNLESS OTHERWISE SPECIFIED DIMENSIONS ARE IN INCHES TOLERANCES ON:
FRACTIONS = ±1/16 .xx = ±.1
ANGLES = ±1° .xx = ±.03
SURFACE FINISH ✓ .xxx = ±.010

MATERIAL

DRAWN BY WS DATE 3-5-75
CHECKED
DESIGN ENGINEER
PROJECT ENGINEER R. Wayne Sauter
DOCUMENT CONTROL
APPROVED

ATARI INCORPORATED
14600 Winchester Boulevard
Los Gatos, California 95030

TITLE INDY 800
ASSEMBLY INSTRUCTIONS

SIZE D DRAWING NO 003347 REV B
SCALE NONE SHEET 1 OF 2

NOTE:

MFR. P/

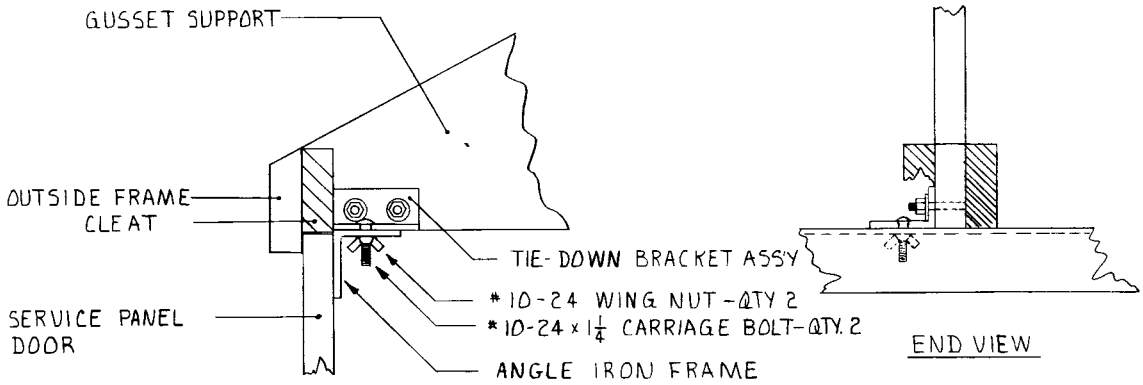

SIDE VIEW

DETAIL B.

REFER TO STEP 1 OF ASS'Y INSTRUCTIONS - SHEET 1 of 2.

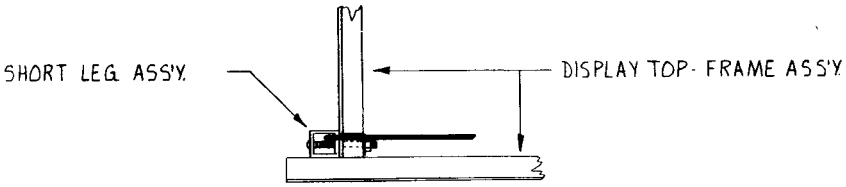

TOP VIEW

DETAIL E.

REFER TO STEP 4 OF ASS'Y INSTRUCTIONS - SHEET 1 of 2.

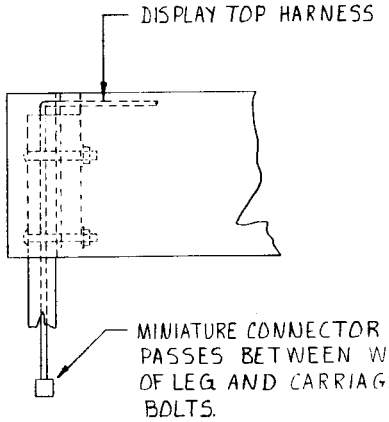

SIDE VIEW

REVISIONS				
SYM	DESCRIPTION	INITIALS and DATE		
		DRFTG	CHECK	ENGRG
A	PROD. REL	WS	3-5-75	
B	E.C.N. 1314	WS	4-11-75	

NOTE: USE A FUEFET WALLET IN THE APPLICATION OF THESE FASTENERS.

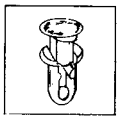

DETAIL A.

MFR. PART NO. C6Q184AA-000-905
BLACK

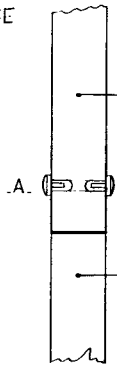

DETAIL D.

REFER TO STEP 5 OF ASS'Y INSTRUCTIONS - SHEET 1 OF 2

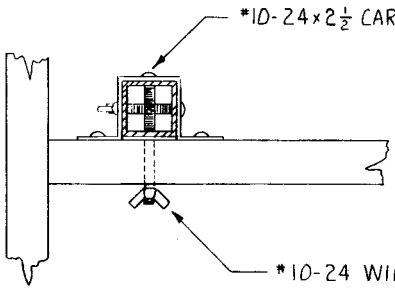

TOP VIEW

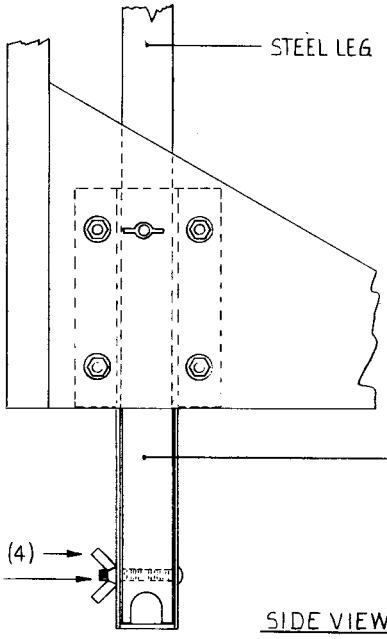

SIDE VIEW

DETAIL C.

REFER TO STEP 5 OF ASS'Y INSTRUCTIONS - SHEET 1 OF 2.

NEXT ASSY	INDY 800
USED ON	
APPLICATION	

INTERPRET THIS DRAWING PER USASI Y14.5

UNLESS OTHERWISE SPECIFIED DIMENSIONS ARE IN INCHES TOLERANCES ON
FRACTIONS = ±1/16 X = ±.1
ANGLES = ±1° XX = ±.03
SURFACE FINISH XXX = ±.010

MATERIAL

DRAWN BY WS DATE 3-5-75
CHECKED
DESIGN ENGINEER
PROJECT ENGINEER K. Wayne Santa
DOCUMENT CONTROL
APPROVED

ATARI INCORPORATED
14600 Winchester Boulevard
Los Gatos, California 95030

TITLE
INDY 800
ASSEMBLY INSTRUCTIONS

SIZE D | DRAWING NO 003347 | REV B
SCALE NONE | SHEET 2 OF 2

DRAWING NO | THIS | ATR

ATARI
Innovative leisure

ASSEMBLY TITLE / RT8 BACKPLANE BOARD

P/L 003199

PARTS LIST SPECIFICATION

Drawn	
Checked	Mech. Eng.
Proj. Eng.	Elec. Eng

REV.

Rev.	Description	Date	Apprv.	Rev.	Description	Date	Apprv.
A		2-3-75					
B	REV PER ECN 1253	[illegible]					
C	REV PER ECN 1392	4/30/75					
D	REV [illegible] 1436	5/14/75					

Item	Part Number	Qty.	DESCRIPTION
1	003200	1	Printed Circuit Board (Backplane)
2	79-514222	8	44 Pin Edge Connector, .156, Dip Solder
3	79-514243	3	86 Pin Edge Connector, .156, Dip Solder
4	75-1408	22	Screw, Mach., Pan Hd., Phil., 4-40 x ½"
5	75-914	22	Nut, Machine, Hex, 4-40
6	75-054	22	Lock Washer, Internal Star, #4
7	79-511001	3	CONNECTOR KEY

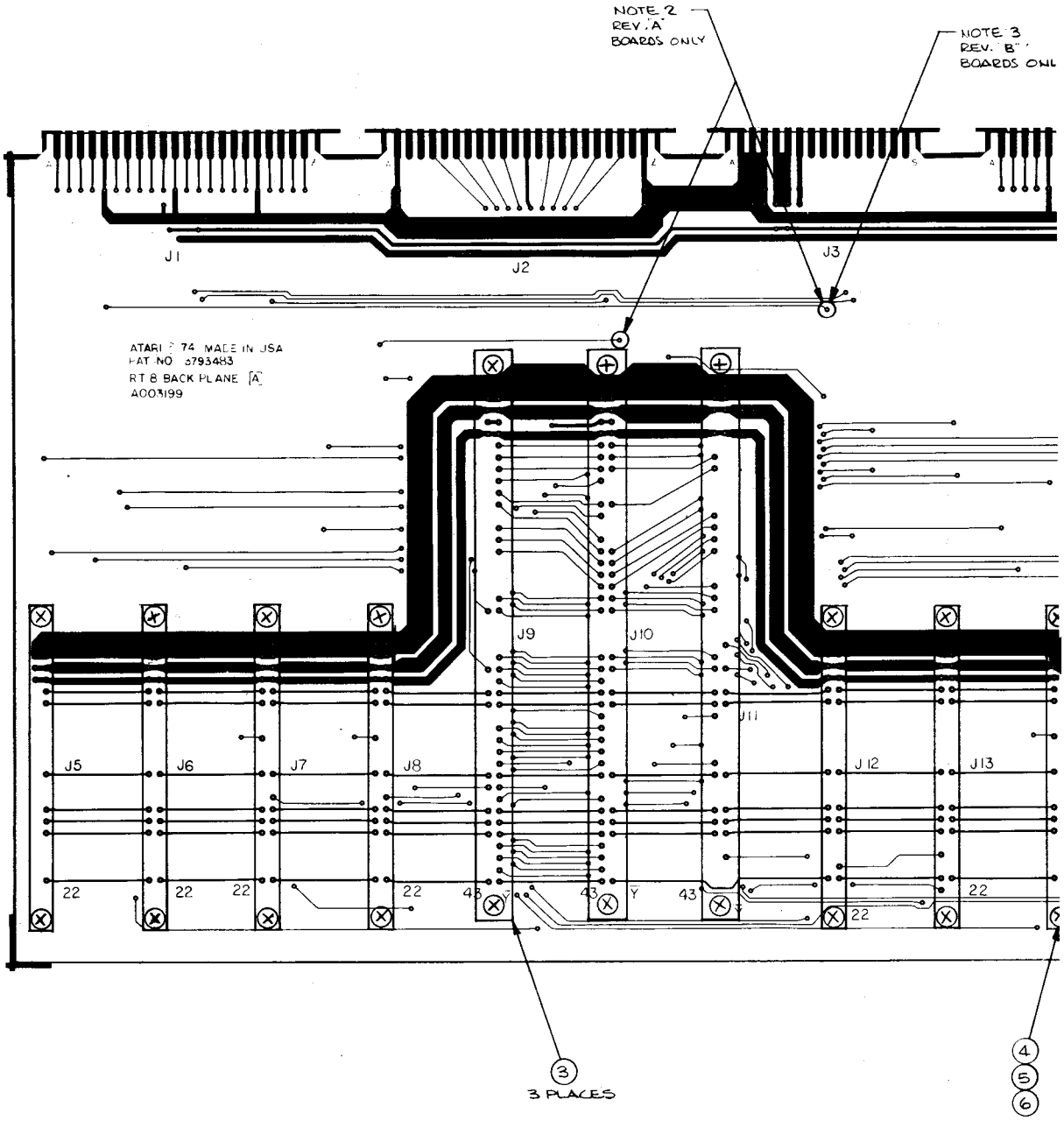
NOTE 2
REV. "A"
BOARDS ONLY
NOTE 3
REV. "B"
BOARDS ONL
J1
J2
J3
ATARI © 74 MADE IN USA
PAT NO 3793483
RT 8 BACK PLANE "A"
A003199
J5
J6
J7
J8
J9
J10
J11
J12
J13
22
22
22
22
45
43
43
22
22
3
3 PLACES
4
5
6

REVISIONS				
SYM	DESCRIPTION	INITIALS and DATE		
		DRF'TG	CHECK	ENGRG
A	PRODUCTION RELEASE	2/21/75		
B	REVISED PER ECN 1253	3/25/75		
C	REVISED PER ECN 1392	4/30/75		
D	REVISED PER ECN 1436	5/14/75		

- NOTE 3
REV. B"
BOARDS ONLY

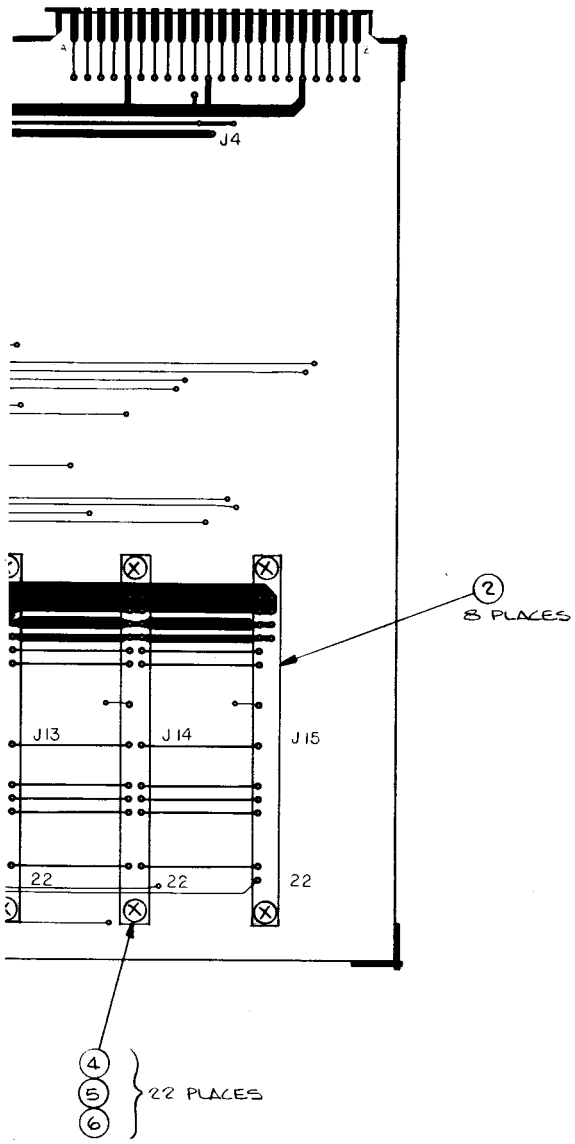

NOTE:

1. ALL CONNECTORS MUST BE HAND SOLDERED TO P.C. BOARD.
2. APPLY DENNISON #43-146-1 SIGNAL DOTS TO THE TWO PLACES INDICATED, ON ALL REVISION "A" 003200 P.C. BOARDS (COMPONENT SIDE).
3. APPLY DENNISON #43-146-1 SIGNAL DOT TO THE ONE PLACE INDICATED, ON ALL REVISION "B" 003200 P.C. BOARDS (COMPONENT SIDE).
4. ADD A CONNECTOR KEY TO CONN. J9 (SYNC BD) BETWEEN PINS 31 & 32.
5. ADD A CONNECTOR KEY TO CONN. J10 (SCORE BD) BETWEEN PINS 29 & 30.
6. ADD A CONNECTOR KEY TO CONN. J11 (COIN BD) BETWEEN PINS 33 & 34.

MODIFICATIONS: (TO REVISION "A" 003200 P.C. BOARDS ONLY)

1. JUMPER CONNECTOR J9 PIN Y TO CONNECTOR J10 PIN 35.

NEXT ASSY	INDY 800
USED ON	
APPLICATION	

INTERPRET THIS DRAWING PER USASI Y14.5

UNLESS OTHERWISE SPECIFIED DIMENSIONS ARE IN INCHES TOLERANCES ON
FRACTIONS = ±1/16 .XX = ±.1
ANGLES = ±1° .XX = ±.03
SURFACE FINISH ✓ .XXX = ±.010

MATERIAL: SEE P/L

DRAWN BY: SLADE DATE: 2/21/75
CHECKED
DESIGN ENGINEER
PROJECT ENGINEER
DOCUMENT CONTROL
APPROVED

ATARI INCORPORATED
14600 Winchester Boulevard
Los Gatos, California 95030

TITLE: ASSEMBLY, BACK PLANE BD.

SIZE: D | DRAWING NO: A003199 | REV: D
SCALE | SHEET 1 OF 1

ATARI
Innovative leisure

ASSEMBLY TITLE / RT8 EXTENDER BOARD, 86 PIN **P/L** 003197

PARTS LIST SPECIFICATION

Drawn		
Checked	Mech. Eng.	
Proj. Eng.	Elec. Eng	REV. A

Rev.	Description	Date	Apprv.	Rev.	Description	Date	Apprv.
A		2-3-75					

Item	Part Number	Qty.	DESCRIPTION
1	003198	1	Printed Circuit Board (86 Pin Ext.)
2	79-514243	1	86 Pin Edge Connector, .156, Dip Solder

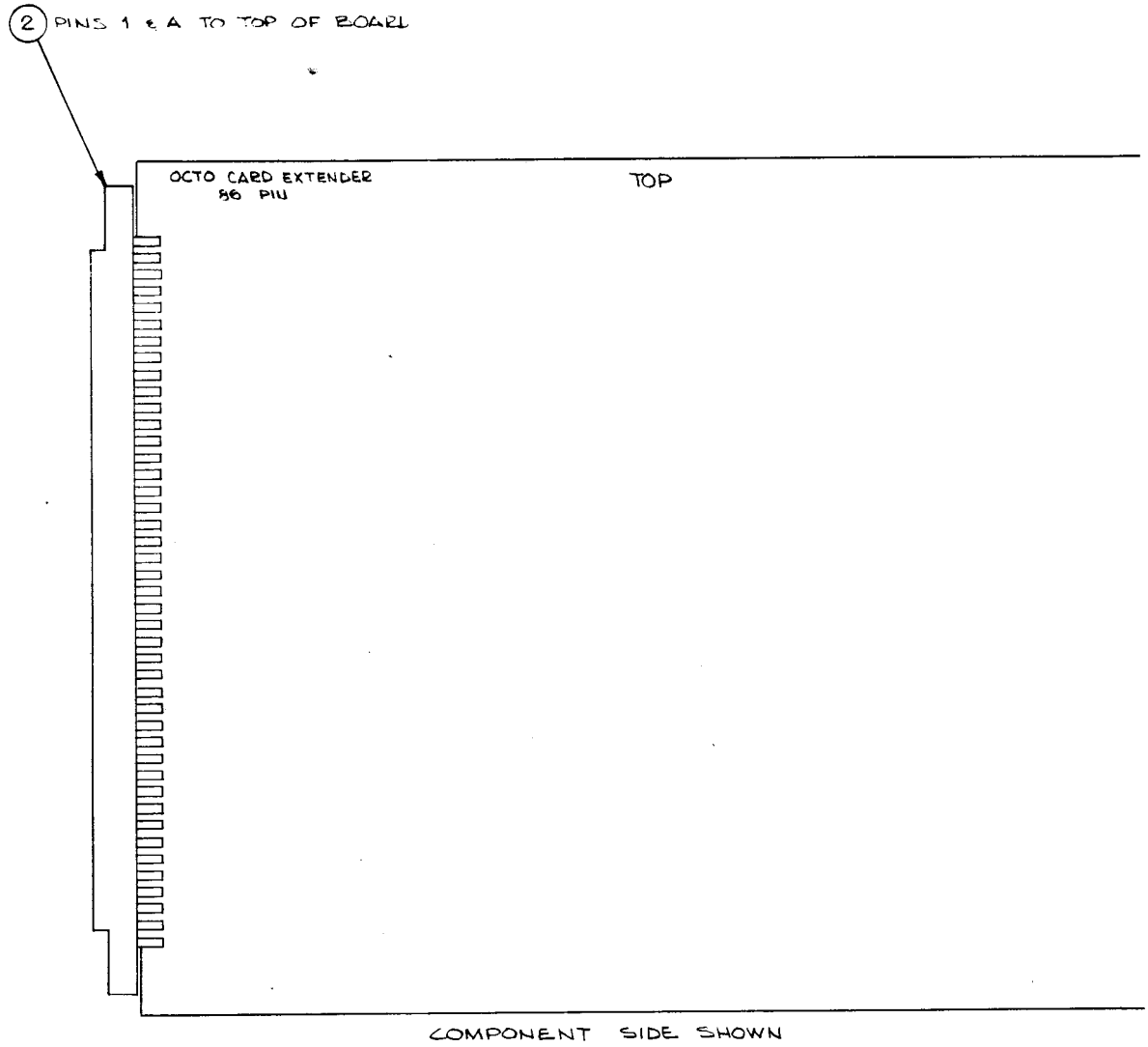

INTERPRET T
PER USASI Y1

UNLESS OTHER
DIMENSIONS
TOLERA

FRACTIONS = ±1/
ANGLES = ±1°
SURFACE FINISH

MATERIAL:

SE

P/L

NOTICE TO ALL PERSONS RECEIVING THIS DRAWING CONFIDENTIAL: Reproduction Forbidden without the specific written permission of Atari Inc., Los Gatos, California. This drawing is only conditionally issued, and neither receipt nor possession thereof confers or transfers any right in, or license to use, the subject matter of the drawing or any design or technical information shown thereon, nor any right to reproduce this drawing or any part thereof, except for manufacture by vendors for Atari Incorporated and for manufacture under the corporation's written license, no right to reproduce this drawing is granted or the subject matter thereof unless by written agreement with or written permission from the corporation.

NEXT ASSY	USED ON
	RT-8 PLAYER

APPLICATION

REVISIONS				
SYM	DESCRIPTION	INITIALS and DATE		
		DRFTG	CHECK	ENGRG
A	PRODUCTION RELEASE	2/25/75		

TOP

NOTES

1. SOLDER CONNECTOR (ITEM 2) TO TRACES ON BOTH SIDES OF BOARD.

ENT SIDE SHOWN

	RT-8 PLAYER
NEXT ASSY	USED ON
APPLICATION	

INTERPRET THIS DRAWING PER USASI Y14.5

UNLESS OTHERWISE SPECIFIED DIMENSIONS ARE IN INCHES TOLERANCES ON:

FRACTIONS = ±1/16 .x = ±.1
ANGLES = ±1° .xx = ± .03
SURFACE FINISH ✓ .xxx = ± .010

MATERIAL: SEE P/L 003197

DRAWN BY: BLADE DATE: 2/25/75
CHECKED
DESIGN ENGINEER
PROJECT ENGINEER
DOCUMENT CONTROL
APPROVED

ATARI INCORPORATED
14600 Winchester Boulevard
Los Gatos, California 95030

TITLE: ASSEMBLY, RT-8 86 PIN EXTENDER

SIZE: C | DRAWING NO. A003197 | REV A

SCALE — | SHEET 1 OF 1

DRAWING NO. | SHEET | REV

ATARI
Innovative leisure

ASSEMBLY TITLE / RT8 EXTENDER BOARD, 44 PIN P/L 003195

PARTS LIST SPECIFICATION

Drawn		
Checked	Mech. Eng.	
Proj. Eng.	Elec. Eng	REV. A

Rev.	Description	Date	Apprv.	Rev.	Description	Date	Apprv.
A		2-3-75					

Item	Part Number	Qty.	DESCRIPTION
1	003196	1	Printed Circuit Board (44 Pin Ext.)
2	79-515222	1	44 Pin Edge Connector, .156, Extender Type

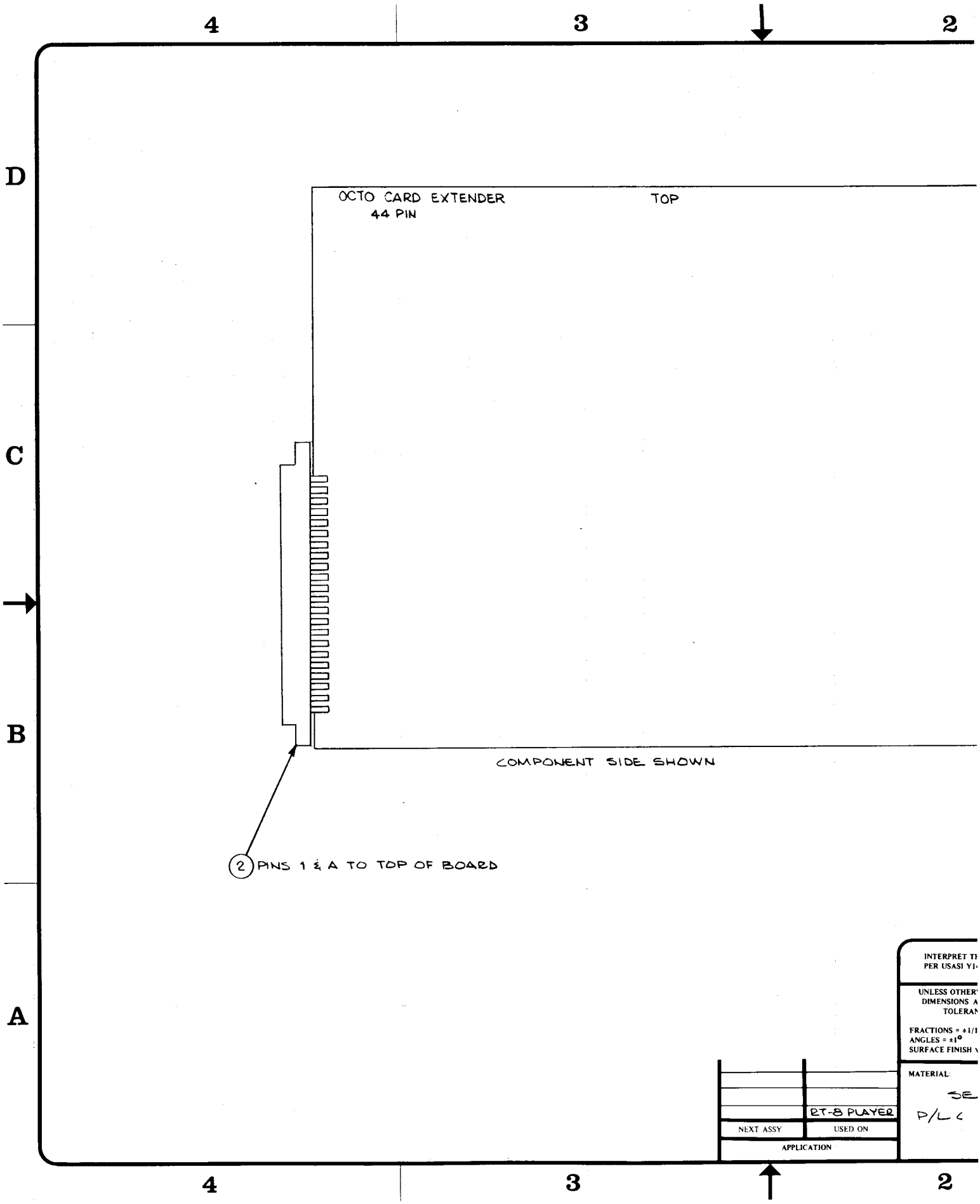
OCTO CARD EXTENDER
44 PIN
TOP
COMPONENT SIDE SHOWN
2 PINS 1 & A TO TOP OF BOARD
INTERPRET TI
PER USASI Y1
UNLESS OTHER
DIMENSIONS A
TOLERAN
FRACTIONS = ±1/1
ANGLES = ±1°
SURFACE FINISH
MATERIAL:
SE
P/L (
RT-8 PLAYER
NEXT ASSY
USED ON
APPLICATION

REVISIONS				
SYM	DESCRIPTION	INITIALS and DATE		
		DRFTG	CHECK	ENGRG
A	PRODUCTION RELEASE	2/25/75		

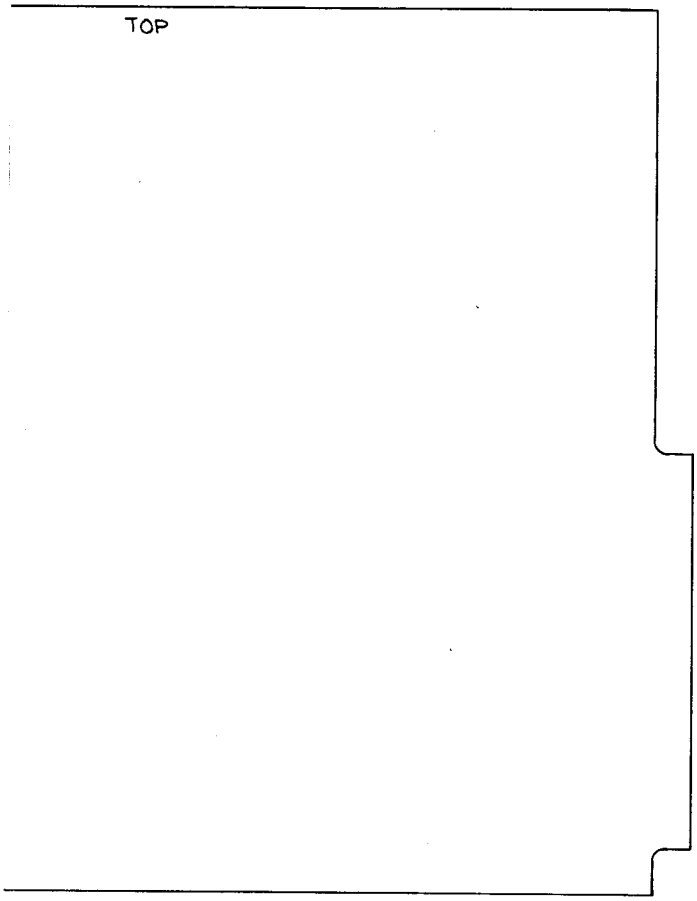

JT SIDE SHOWN

NOTES:

1. SOLDER CONNECTOR (ITEM 2) TO TRACES ON BOTH SIDES OF BOARD.

DRAWING NO.

SHEET

REV

	RT-8 PLAYER
NEXT ASSY	USED ON
APPLICATION	

INTERPRET THIS DRAWING PER USASI Y14.5

UNLESS OTHERWISE SPECIFIED DIMENSIONS ARE IN INCHES TOLERANCES ON:

FRACTIONS = ±1/16 .x = ±.1
ANGLES = ±1° .xx = ± .03
SURFACE FINISH ✓ .xxx = ± .010

MATERIAL: SEE P/L 003195

DRAWN BY	DATE
SLADE	2/25/75
CHECKED	
DESIGN ENGINEER	
PROJECT ENGINEER	26 FEB 75
DOCUMENT CONTROL	
APPROVED	

ATARI

ATARI INCORPORATED
14600 Winchester Boulevard
Los Gatos, California 95030

TITLE ASSEMBLY, RT-8 44 PIN EXTENDER

SIZE	DRAWING NO.	REV
C	A003195	A

SCALE — SHEET 1 OF 1

ATARI
Innovative leisure

ASSEMBLY TITLE / REMOTE CONTROL BOARD **P/L** 003193

PARTS LIST SPECIFICATION

Drawn		
Checked	Mech. Eng.	
Proj. Eng.	Elec. Eng	REV. C

Rev.	Description	Date	Apprv.	Rev.	Description	Date	Apprv.
A		2-3-75					
B	Rev per ECN 1148	2-26-75					
C	REV PER ECN 1280	4-2-75					

Item	Part Number	Qty.	DESCRIPTION
1	003194	1	Circuit Board (Remote Control)
2	61-011C	9	SPDT Toggle Switch, PC Mount, w/Panel Dress Nut (C&K #7107 P3 D C B E A7807)
3	62-007	1	SPDT Momentary Pushbutton Switch, PC Mount, w/Cap & Bezel (C&K #8121C 8018-2 w/8025)
4	A003159-01	1	Remote Control Cable
5	78-25001	1	Cable Tie, Screw Down
6	75-247S	1	Screw, Machine, Rd. Hd., Cross Rec #4-40
7	75-054	1	Washer, Lock, Int. Tooth, Steel #4
8	75-914S	1	Nut, Machine, Hex #4-40

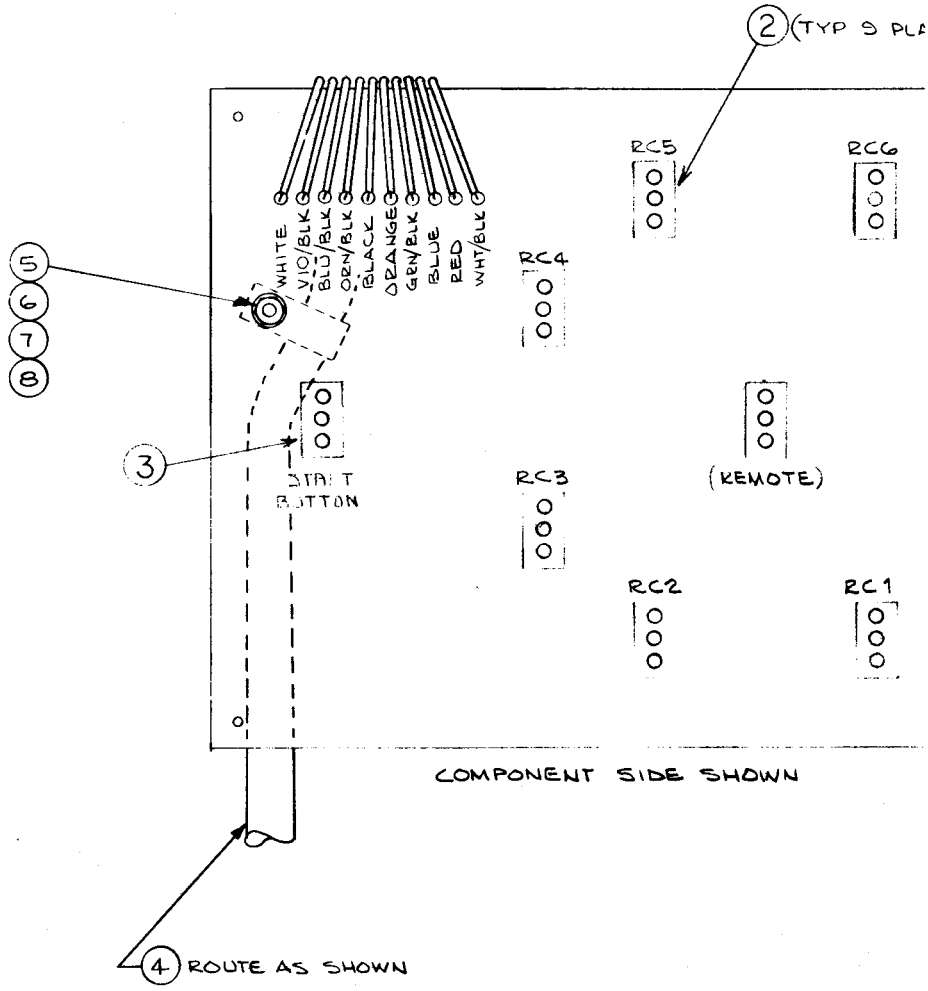

INTERPRET TI
PER USASI Y1-

UNLESS OTHER
DIMENSIONS A
TOLERAN

FRACTIONS = ±1/1
ANGLES = ±1°
SURFACE FINISH

MATERIAL:
SEE
P/L (

NEXT ASSY	USED ON
	RT-8 PLAYER

APPLICATION

REVISIONS				
SYM	DESCRIPTION	INITIALS and DATE		
		DRFTG	CHECK	ENGRG
B	PRODUCTION RELEASE	2/25/75		
C	REVISED PER ECN 1282	4/2/75		

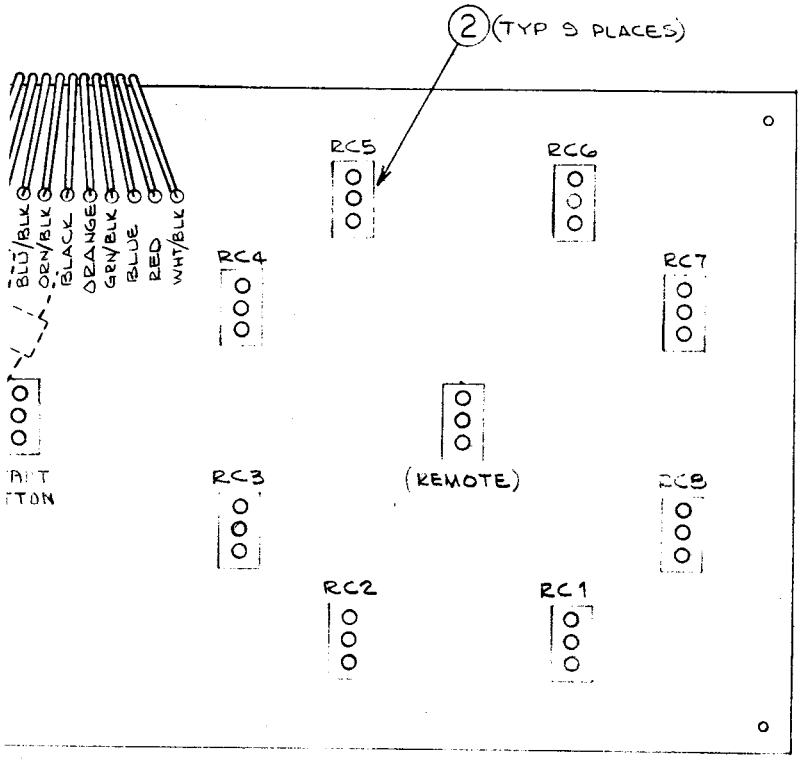

COMPONENT SIDE SHOWN

SHOWN

RT-8 PLAYER	
NEXT ASSY	USED ON
APPLICATION	

INTERPRET THIS DRAWING PER USASI Y14.5

UNLESS OTHERWISE SPECIFIED DIMENSIONS ARE IN INCHES TOLERANCES ON:

FRACTIONS = ±1/16 .x = ±.1
ANGLES = ±1° .xx = ± .03
SURFACE FINISH ✓ .xxx = ± .010

MATERIAL: SEE P/L 003193

DRAWN BY P. BRISTOW DATE 2-14-75
CHECKED
DESIGN ENGINEER
PROJECT ENGINEER L.V. Kaus 25 FEB 75
DOCUMENT CONTROL
APPROVED 2/25/75

ATARI INCORPORATED
14600 Winchester Boulevard
Los Gatos, California 95030

TITLE ASSEMBLY, RT-8 REMOTE CONTROL BD

SIZE	DRAWING NO.	REV
C	A003193	C
SCALE 1:1		SHEET 1 OF 1

DRAWING NO. A003193 SHEET 1/1 REV B

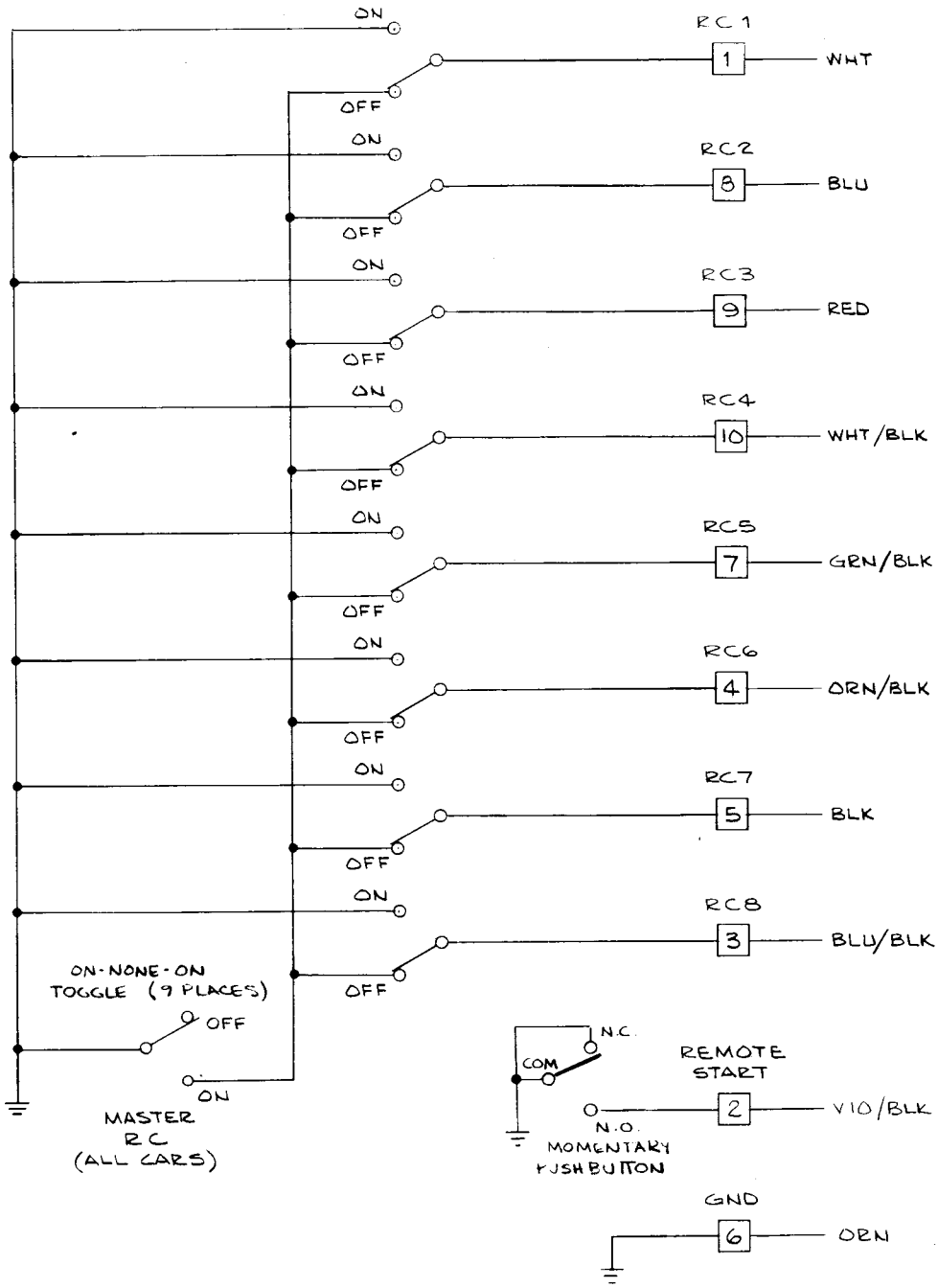

INTERPRET
PER USASI Y

UNLESS OTHE
DIMENSIONS
TOLER/

FRACTIONS = ±1
ANGLES = ±1°
SURFACE FINISH

MATERIAL:

A003193	RT-8 PLAYER
NEXT ASSY	USED ON
APPLICATION	

REVISIONS				
SYM	DESCRIPTION	INITIALS and DATE		
		DRFTG	CHECK	ENGRG
B	PRODUCTION RELEASE	2/25/75		
C	REVISED PER ECN 1282	4/2/75		

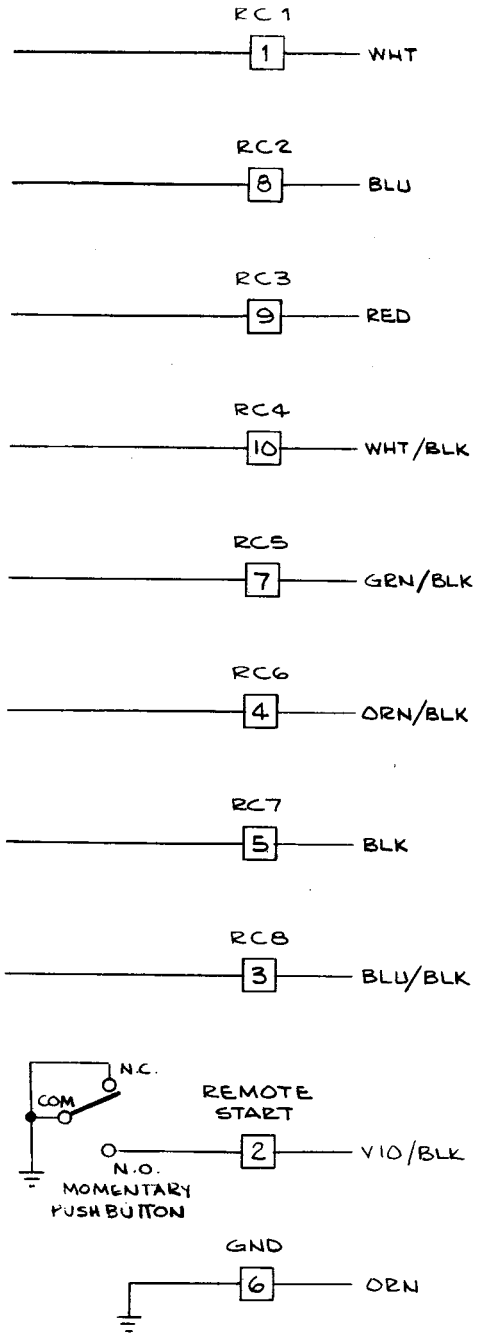

INTERPRET THIS DRAWING PER USASI Y14.5

UNLESS OTHERWISE SPECIFIED DIMENSIONS ARE IN INCHES TOLERANCES ON:

FRACTIONS = ±1/16 .x = ±.1
ANGLES = ±1° .xx = ± .03
SURFACE FINISH ✓ .xxx = ± .010

MATERIAL:

A003193	RT-8 PLAYER
NEXT ASSY	USED ON
APPLICATION	

DRAWN BY SLADE DATE 2/25/75
CHECKED
DESIGN ENGINEER
PROJECT ENGINEER 25 FEB 75
DOCUMENT CONTROL
APPROVED 2/25/75

ATARI INCORPORATED
14600 Winchester Boulevard
Los Gatos, California 95030

TITLE SCHEMATIC, RT-8 REMOTE CONTROL BD.

SIZE C | DRAWING NO. 003193 | REV C

SCALE | SHEET 1 OF 1

DRAWING NO. | SHEET | REV

ATARI
Innovative leisure

ASSEMBLY TITLE / INDY 800 POWER SUPPLY P.C.B.

P/L 003191

PARTS LIST SPECIFICATION

Drawn	
Checked	Mech. Eng.
Proj. Eng.	Elec. Eng

REV. F

Rev.	Description	Date	Apprv.	Rev.	Description	Date	Apprv.
D	REV PER ECN 1289	4/29/75					
E	REV PER ECN [illegible]	[illegible]					
F	Rev per ECN 1458	5/30/75					

Item	Part Number	Qty.	DESCRIPTION
1	003192	1	P.C.B., Indy 800 Power Supply
2	24-160808	5	Capacitor, Electrolytic, 8000uf, 16V, 85°C
3	24-250508	4	Capacitor, Electrolytic, 5000uf, 25V, 85°C
4	31-MR501	2	Diode, Type MR501 (3A)
5	31-1N1199A	2	Diode, Type 1N1199A (12A)
6	78-06006	1	Heatsink, Wakefield 680-1.25
7	61-011C	1	SPDT Toggle Switch, C & K 7101
8	10-5472	8	Resistor, Carbon, 5%, ¼W, 4.7K ohm
9	13-0100	8	Resistor, Carbon, 10%, 2W, 10 ohm
10	34-2N3643	8	NPN Transistor, Type 2N3643
11			
12	34-BD437	8	NPN Power Transistor, Type BD 437 (SGS-ATES)
13	72-1405C	12	Machine Screw, 4-40 x 5/16, Stainless
14	75-914S	12	Hex Nut, 4-40
15	75-054	12	Lock Washer, Internal Star, #4
16	75-014S	12	Flat Washer, #4
17	79-58005	3	Connector, 10 pin, P.C. Mount, Amp #1-380991
18	79-3202	4	Fuse Clip, 3AG, Beryllium Copper, Silver Plate, Little Fuse #121001
19	46-2031503	1	Fuse, 3AG, 15A, 32V, Fast-Blow
20	46-203401	1	Fuse, 3AG, 4A, 125V, Fast-Blow
21	—— ——	8	22 AWG Wire Jumper

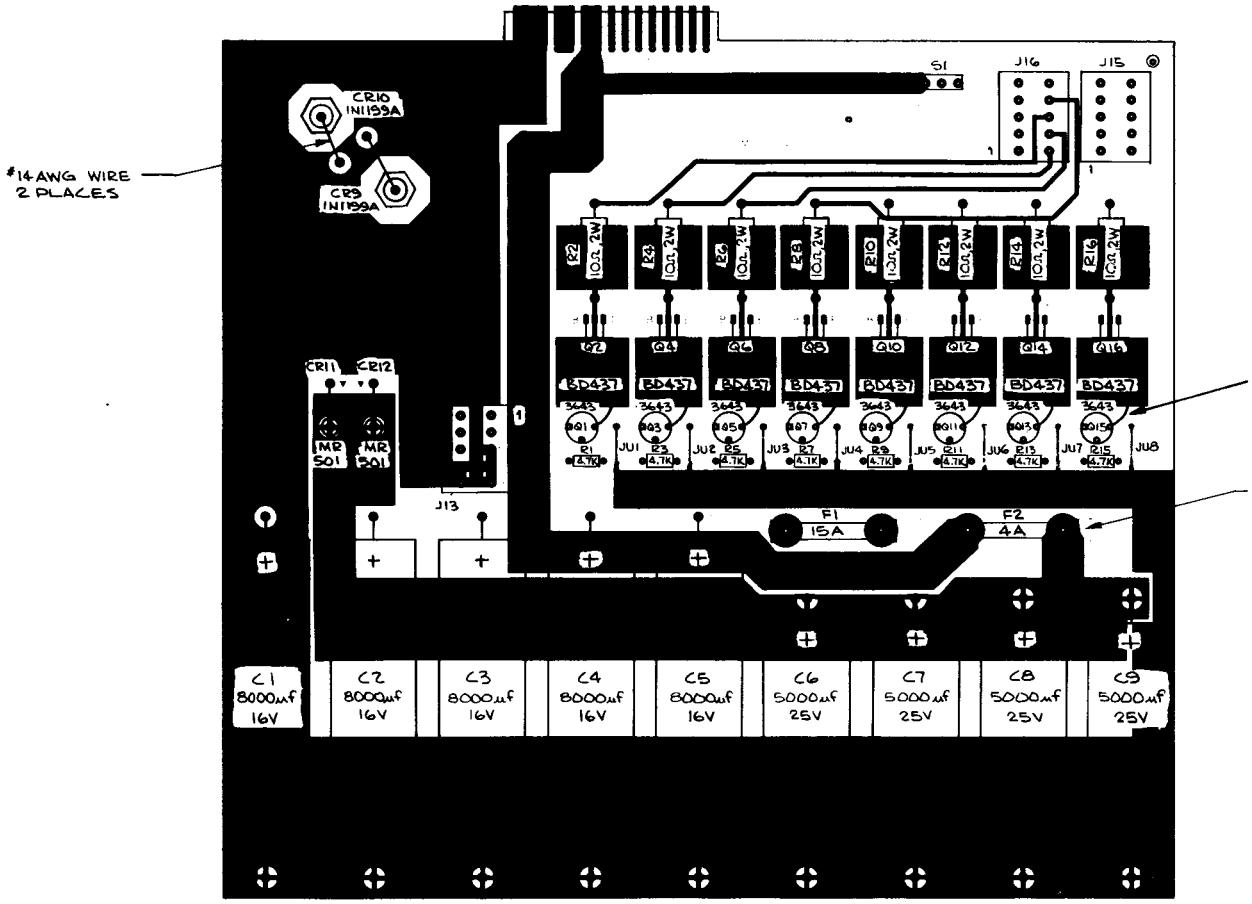
#14 AWG WIRE
2 PLACES
CR10
1N1199A
CR9
1N1199A
S1
J16
J15
R2
R4
R6
R8
R10
R12
R14
R16
10Ω, 2W
Q2
Q4
Q6
Q8
Q10
Q12
Q14
Q16
BD437
3643
Q1
Q3
Q5
Q7
Q9
Q11
Q13
Q15
R1
R3
R5
R7
R9
R11
R13
R15
4.7K
JU1
JU2
JU3
JU4
JU5
JU6
JU7
JU8
CR11
CR12
MR
501
J13
F1
15A
F2
4A
C1
8000μf
16V
C2
8000μf
16V
C3
8000μf
16V
C4
8000μf
16V
C5
8000μf
16V
C6
5000μf
25V
C7
5000μf
25V
C8
5000μf
25V
C9
5000μf
25V

REVISIONS				
SYM	DESCRIPTION	INITIALS and DATE		
		DRFTG.	CHECK	ENGRG.
D	REVISED PER ECN 1389	4/28		
E	REVISED PER ECN 1406 & 1424	5/12/75		
F	REVISED PER ECN 1458, 1466	5/30/75		

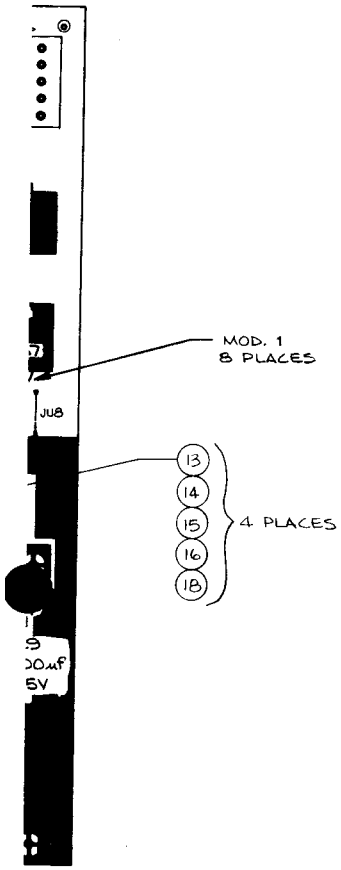

NOTE:

1. MOUNT CR11 AND CR12 (MR501) VERTICALLY, WITH CATHODE SIDE DOWN.
2. REMOVE PINS 3 AND 8 FROM J13 BEFORE MOUNTING.
3. REMOVE PINS 1 AND 2 FROM J15 BEFORE MOUNTING.
4. REMOVE PINS 9 AND 10 FROM J16 BEFORE MOUNTING.

MODIFICATIONS: (TO 003192 REVISION "D" BOARDS ONLY)

1. SOLDER THE COLLECTOR LEADS OF THE EIGHT 2N3643 TRANSISTORS TO THE LARGE COPPER AREA AS SHOWN.

DRAWING NO. | SHEET | REV

INTERPRET THIS DRAWING PER USASI Y14.5

UNLESS OTHERWISE SPECIFIED DIMENSIONS ARE IN INCHES
TOLERANCES ON:
FRACTIONS = ±1/16 x = ±.1
ANGLES = ±1° xx = ±.03
SURFACE FINISH ✓ xxx = ±.010

MATERIAL: SEE P/L 003191

DRAWN BY: SLADE DATE 4/28/75
CHECKED
DESIGN ENGINEER
PROJECT ENGINEER
DOCUMENT CONTROL 4/1/75
APPROVED

ATARI INCORPORATED
14600 Winchester Boulevard
Los Gatos, California 95030

TITLE: ASSEMBLY, POWER SUPPLY BOARD

SIZE D | DRAWING NO A003191 | REV F

SCALE 1/1 | SHEET 1 OF 1

NEXT ASSY	USED ON
	INDY 800

APPLICATION

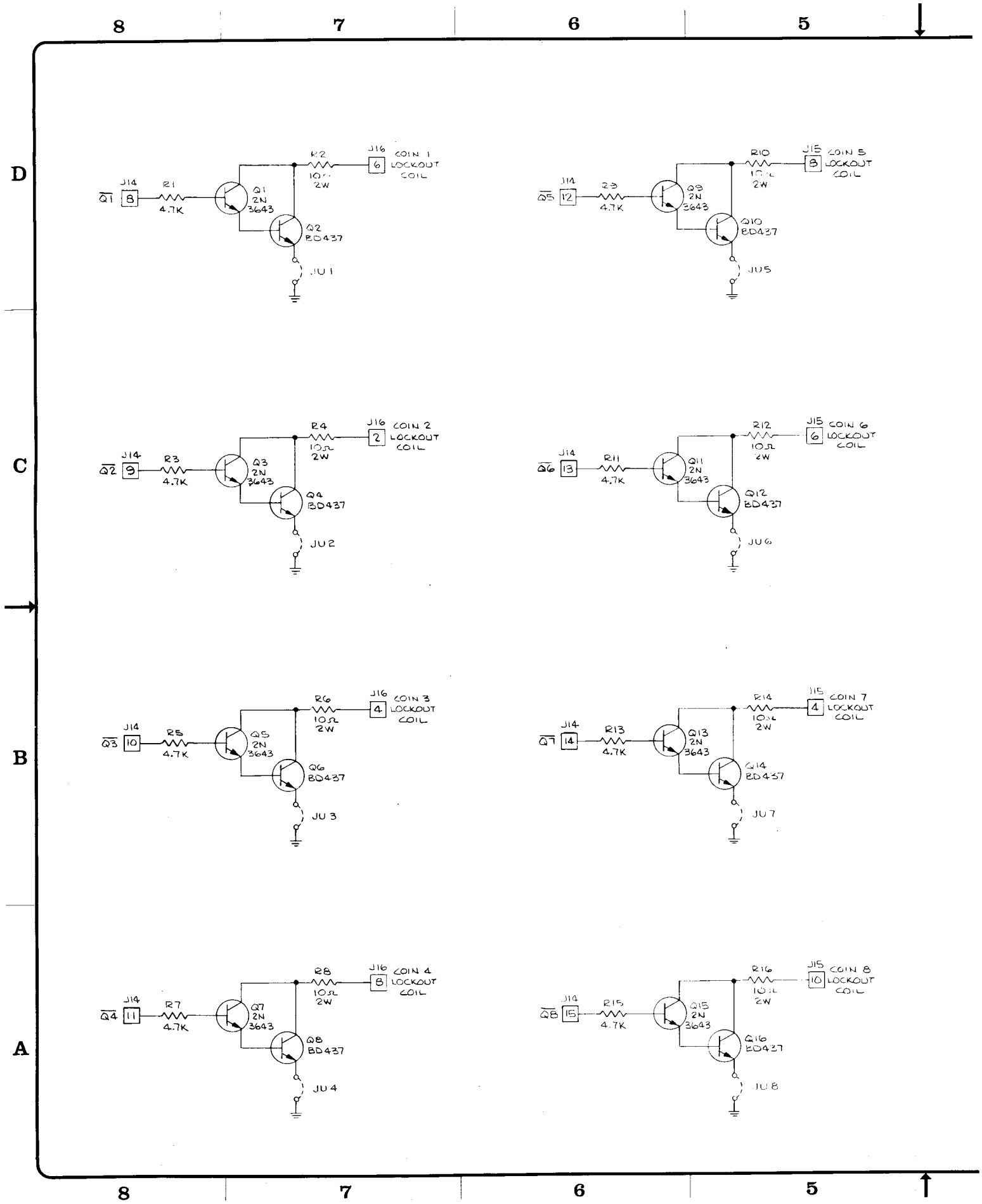
8
7
6
5
D
C
B
A
J14
Q1
8
R1
4.7K
Q1
2N
3643
R2
10Ω
2W
J16
6
COIN 1
LOCKOUT
COIL
Q2
BD437
JU1
J14
Q5
12
R9
4.7K
Q9
2N
3643
R10
2W
J15
8
COIN 5
LOCKOUT
COIL
Q10
BD437
JU5
J14
Q2
9
R3
4.7K
Q3
2N
3643
R4
10Ω
2W
J16
2
COIN 2
LOCKOUT
COIL
Q4
BD437
JU2
J14
Q6
13
R11
4.7K
Q11
2N
3643
R12
10Ω
2W
J15
6
COIN 6
LOCKOUT
COIL
Q12
BD437
JU6
J14
Q3
10
R5
4.7K
Q5
2N
3643
R6
10Ω
2W
J16
4
COIN 3
LOCKOUT
COIL
Q6
BD437
JU3
J14
Q7
14
R13
4.7K
Q13
2N
3643
R14
2W
J15
4
COIN 7
LOCKOUT
COIL
Q14
BD437
JU7
J14
Q4
11
R7
4.7K
Q7
2N
3643
R8
10Ω
2W
J16
8
COIN 4
LOCKOUT
COIL
Q8
BD437
JU4
J14
Q8
15
R15
4.7K
Q15
2N
3643
R16
2W
J15
10
COIN 8
LOCKOUT
COIL
Q16
BD437
JU8

REVISIONS				
SYM	DESCRIPTION	INITIALS and DATE		
		DRFTG	CHECK	ENGRG
D	REVISED PER ECN 1285	4/28		
E	REVISED PER ECN 1406 & 1424	5/12/75		
F	REVISED PER ECN 1438, 1466	5/30/75		

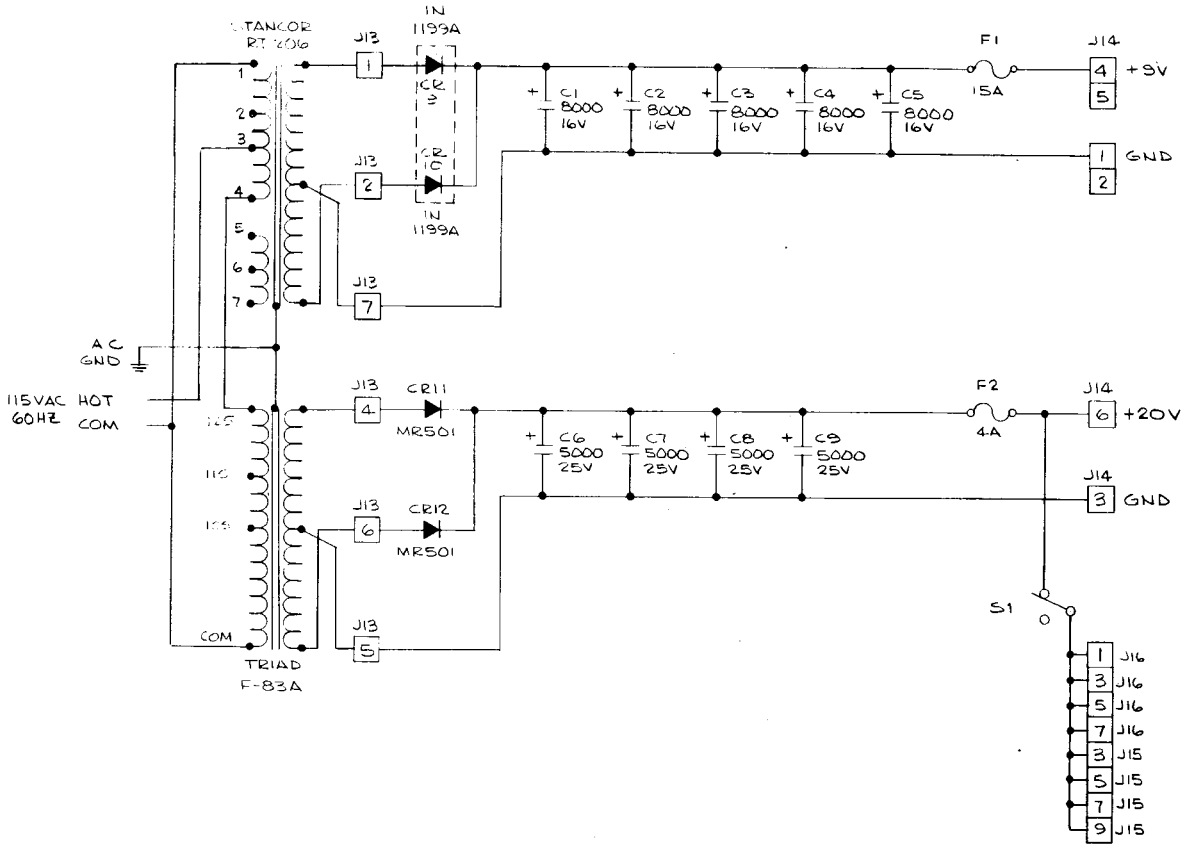

INTERPRET THIS DRAWING PER USASI Y14.5	DRAWN BY Snade DATE 4/28/75
UNLESS OTHERWISE SPECIFIED DIMENSIONS ARE IN INCHES TOLERANCES ON: FRACTIONS = ±1/16 X = ±.1 ANGLES = ±1° XX = ±.03 SURFACE FINISH ✓ XXX = ±.010	CHECKED
	DESIGN ENGINEER
	PROJECT ENGINEER 21 APR 75
MATERIAL	DOCUMENT CONTROL
	APPROVED

NEXT ASSY	USED ON
A003191	INDY 800
APPLICATION	

ATARI INCORPORATED
14600 Winchester Boulevard
Los Gatos, California 95030

TITLE SCHEMATIC, POWER SUPPLY BOARD

SIZE	DRAWING NO	REV
D	003191	F

SCALE — SHEET 1 OF 1

ATARI
Innovative leisure

ASSEMBLY TITLE / RT8 COIN CONTROL BOARD

P/L 003184

PARTS LIST SPECIFICATION

Drawn	
Checked	Mech. Eng.
Proj. Eng.	Elec. Eng.
	REV.

Rev.	Description	Date	Apprv.	Rev.	Description	Date	Apprv.
A		2-4-75					
B	Rev per ECN 1161	2-26-75					
C	REV PER ECN 1287	[illegible]					
D	REV PER ECN 1431 1437	[illegible]					
E	[illegible]	[illegible]					

Item	Part Number	Qty.	DESCRIPTION
1	003185	1	Printed Circuit Board
2	37-LM309	1	LM309K Positive 5-Volt Regulator
3	78-06004	1	Heatsink, WakeField 680-.75A
4	72-1412S	2	Screw, Machine, Pan Hd., Phil., 6-32 x 5/8"
5	75-916S	2	Nut, Machine, Hex, 6-32
6			
7	75-056	2	Lock Washer, Internal Star, #6
8	37-7400	4	7400 I.C.
9	37-7402	3	7402 "
10	37-7404	8	7404 "
11	37-7408	4	7408 "
12	37-7410	1	7410 "
13	37-7430	1	7430 "
14	37-7474	5	7474 "
15	37-7493	2	7493 "
16	37-74164	1	74164 "
17	37-9322	1	9322 "
18	37-555	1	555 Timer I.C.
19	37-LM339	2	LM339 Quad Comparator
20	34-2N3565	2	Transistor, NPN, Type 2N3565
21	31-1N914	27	Diode, Type 1N914
22			
23	10-5101	8	Resistor, Carbon, 5%, ¼W, 100 ohm
24	10-5102	5	" " " " 1K "
25	10-5103	24	" " " " 10K "
26			
27	10-5104	8	" " " " 100K "
28	10-5224	3	" " " " 220K "
29	10-5221	1	" " " " 220 "
30	10-5274	8	" " " " 270K "
31	19-311105	1	Trimpot, 1M ohm, P.C. Vert. Mount
32	27-101102	1	Capacitor, Ceramic, .001 uf, 100V
33	27-101104	29	" " 0.1 uf, 100V
34	29-011	2	Capacitor, Monolythic, .22 uf, 12V, Rad.
35	24-250105	1	Capacitor Electrolytic, 1 uf, 25V
36	24-060257	1	" " 250 uf, 6V
37	27-120104	8	Capacitor, Ceramic, 0.1 uf, 12V, 20%
38	33-2N3644	1	Transistor, PNP, 2N3644
39	10-5394	2	Resistor, Carbon, 5%, ¼W, 390K ohm

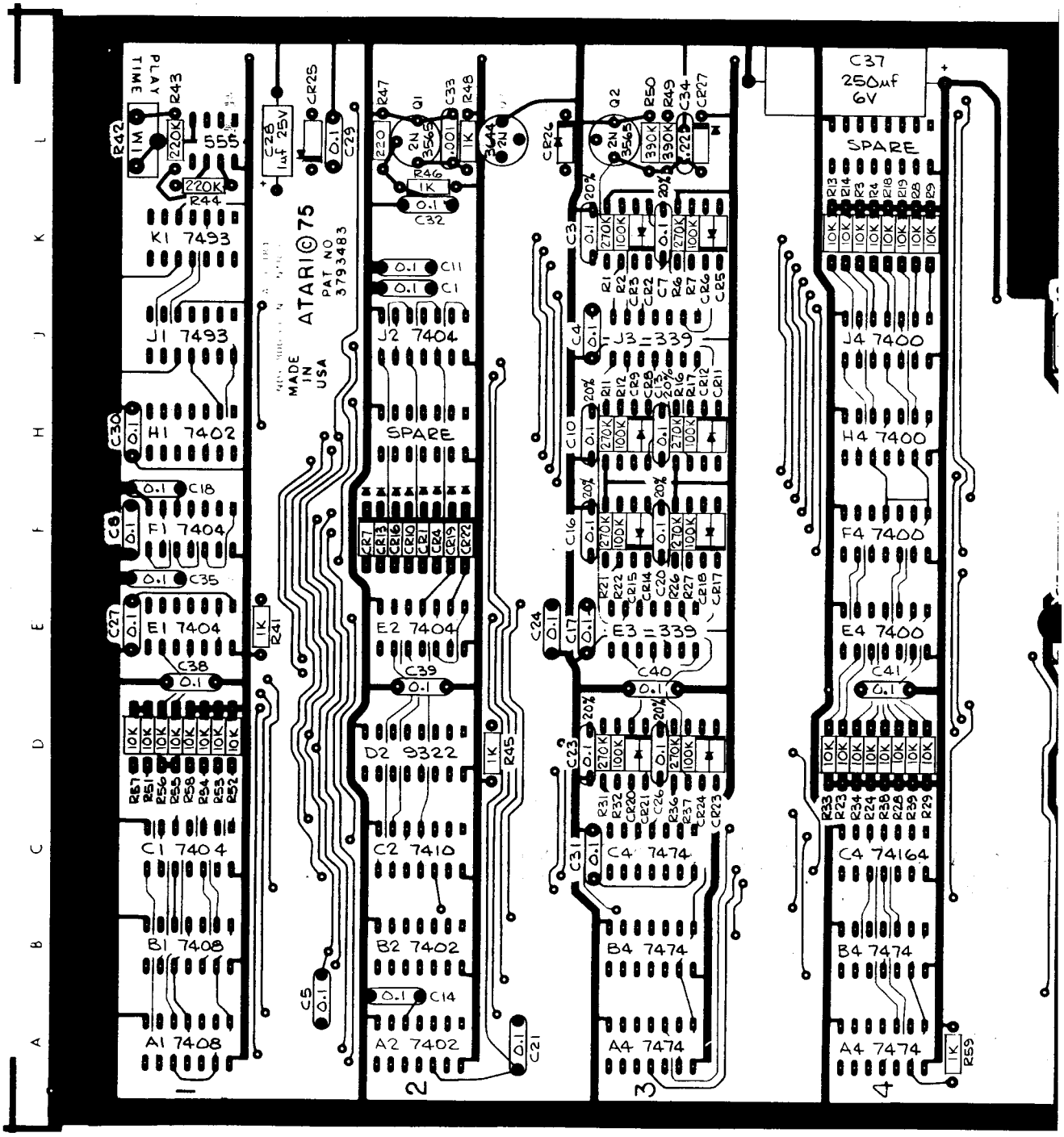
ATARI©75
PAT NO 3793483
MADE IN USA
PLAY TIME
555
K1 7493
J1 7493
H1 7402
F1 7404
E1 7404
C1 7404
B1 7408
A1 7408
J2 7404
SPARE
E2 7404
D2 9322
C2 7410
B2 7402
A2 7402
J3 1339
E3 1339
C4 7474
B4 7474
A4 7474
J4 7400
H4 7400
F4 7400
E4 7400
C4 74164
B4 7474
A4 7474
C37 250uf 6V
C28 1uf 25V
Q1 2N3565
Q2 2N3565
2N3644

REVISIONS				
SYM	DESCRIPTION	INITIALS and DATE		
		DRFTG	CHECK	ENGRG
C	REVISED PER ECN 1387	4/24/75		
C	DOC. CHANGE PER ECN 1423 ADDED RAT TO DRAWING	5/12/75		
D	REVISED PER ECN 1434/1437	5/14/75		
E	REVISED PER ECN 1465	6/9/75		

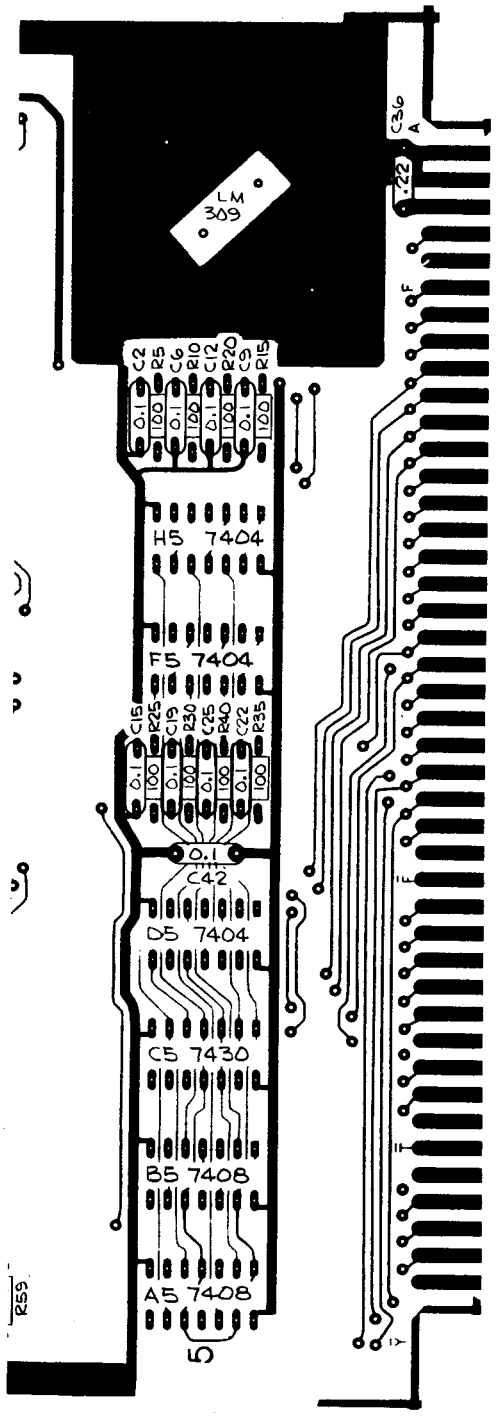

NOTES:

1. THIS ASSEMBLY DRAWING TO BE USED WITH 003185 REVISION B P.C. BOARD.
2. ALL DIODES ARE 1N914.

MODIFICATIONS: (TO BE DONE TO 003185 REV "B" P.C. BOARD)

1. ON CIRCUIT SIDE, CUT TRACE BETWEEN PINS 8 AND 9 OF C5, AND CUT L-SHAPED TRACE GOING TO PIN 8 OF C5, AS SHOWN:

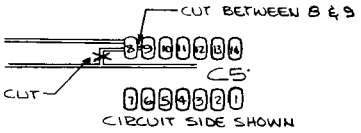

INTERPRET THIS DRAWING PER USASI Y14.5	DRAWN BY Slade DATE 4/24/75	ATARI	ATARI INCORPORATED 14600 Winchester Boulevard Los Gatos, California 95030
UNLESS OTHERWISE SPECIFIED DIMENSIONS ARE IN INCHES TOLERANCES ON: FRACTIONS = ±1/16 ANGLES = ±1° SURFACE FINISH ✓ .x = ±.1 .xx = ±.03 .xxx = ±.010	CHECKED		TITLE ASSEMBLY, COIN CONTROL BOARD
	DESIGN ENGINEER		
	PROJECT ENGINEER 20 APR 75		
MATERIAL: SEE P/L 003184	DOCUMENT CONTROL		SIZE D DRAWING NO A003184 REV E
	APPROVED		SCALE 2/1 SHEET 1 OF 1

NEXT ASSY	USED ON
	INDY 800
APPLICATION	

DRAWING NO | SHEET | REV

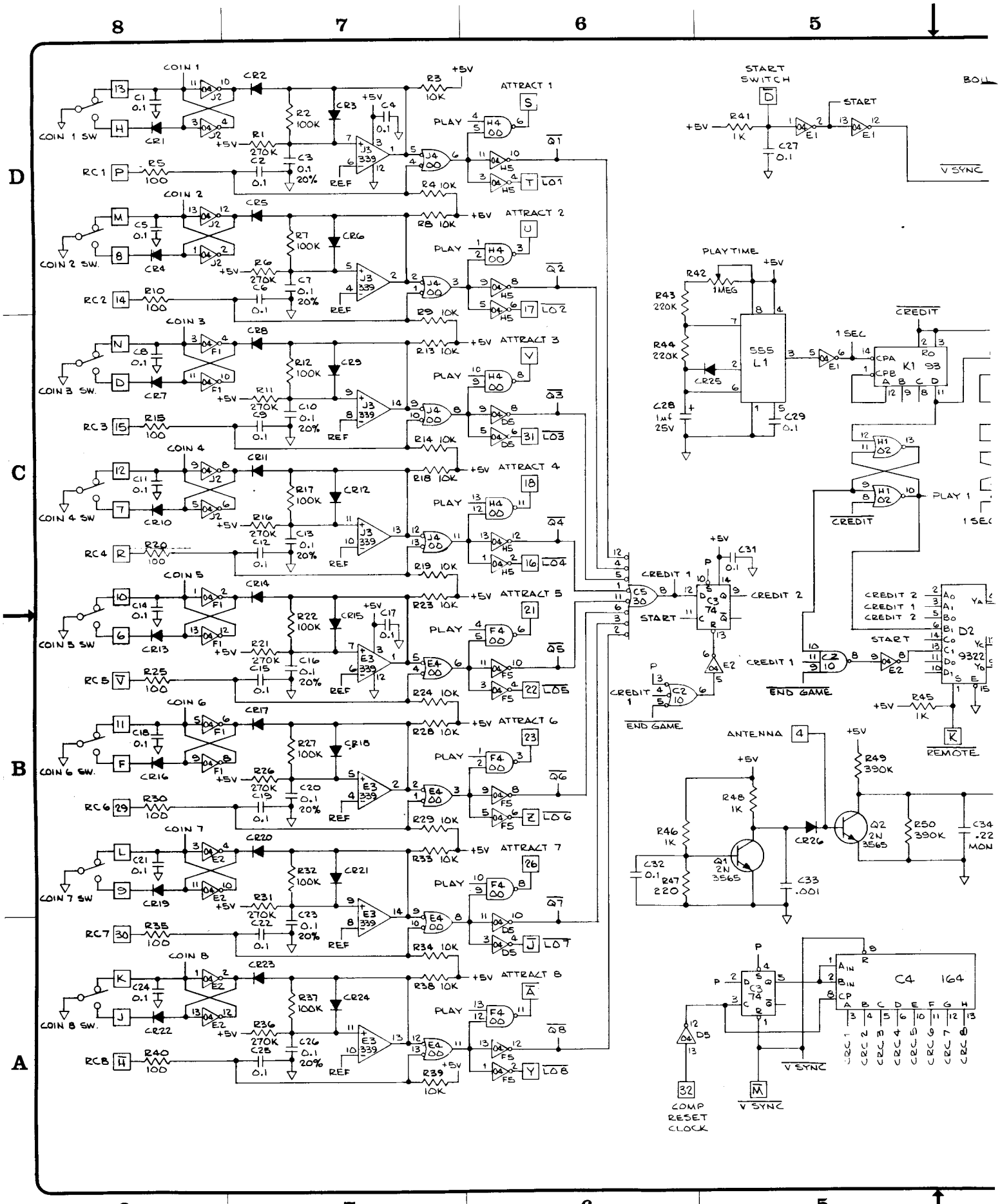
COIN 1
COIN 1 SW
RC 1
ATTRACT 1
PLAY
COIN 2
COIN 2 SW.
RC 2
ATTRACT 2
COIN 3
COIN 3 SW.
RC 3
ATTRACT 3
COIN 4
COIN 4 SW
RC 4
ATTRACT 4
COIN 5
COIN 5 SW
RC 5
ATTRACT 5
COIN 6
COIN 6 SW.
RC 6
ATTRACT 6
COIN 7
COIN 7 SW
RC 7
ATTRACT 7
COIN 8
COIN 8 SW.
RC 8
ATTRACT 8
START SWITCH
START
V SYNC
PLAY TIME
555 L1
CREDIT
K1 93
PLAY 1
CREDIT 1
CREDIT 2
START
END GAME
D2 9322
REMOTE
ANTENNA
Q2 2N 3565
Q1 2N 3565
C4 164
COMP RESET CLOCK
V SYNC

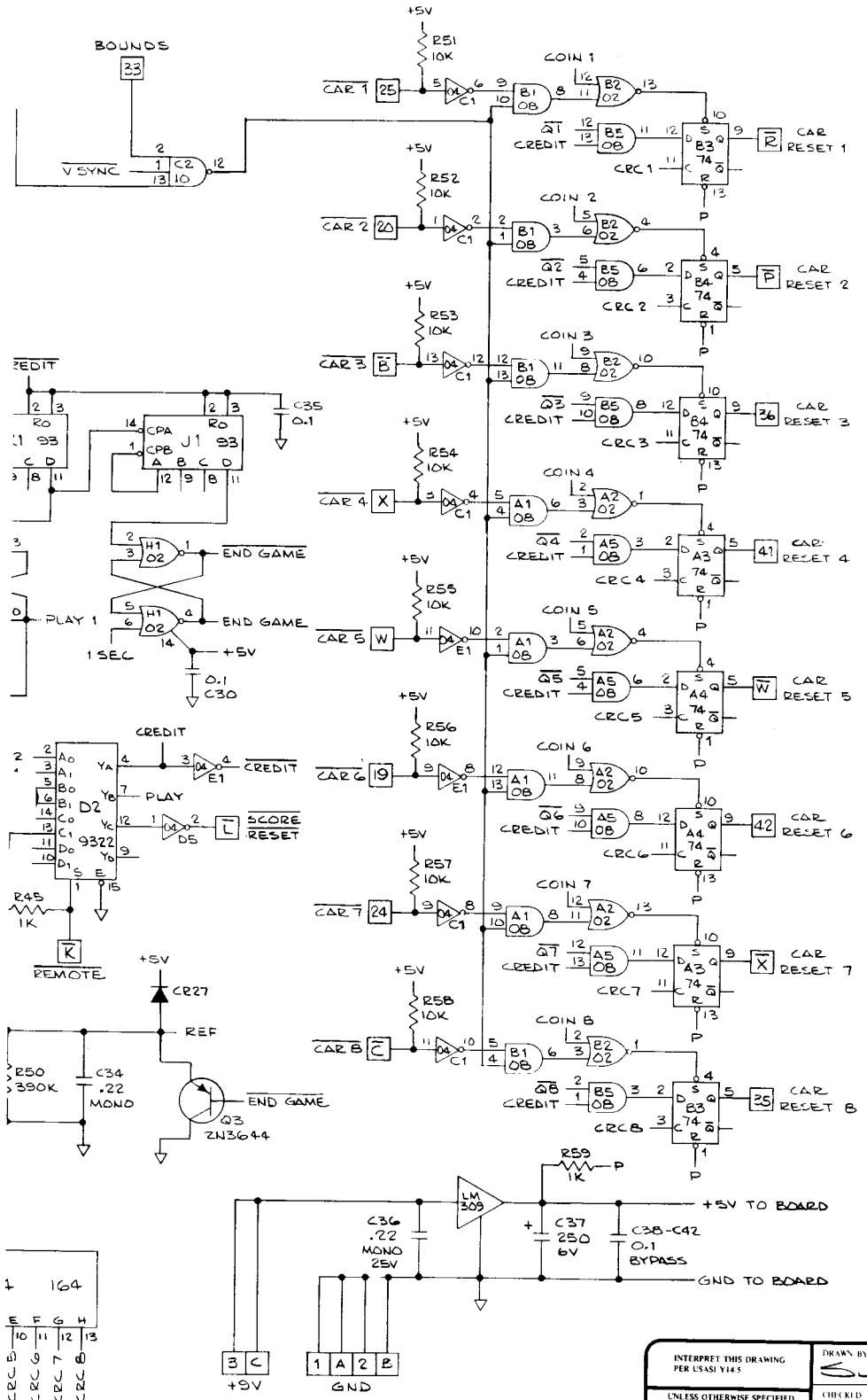

REVISIONS				
SYM	DESCRIPTION	INITIALS and DATE		
		DRT'G	CHECK	ENG'RG
B	PRODUCTION RELEASE	2/26/75		
C	REVISED PER ECN 1387	4/28/75		
D	REVISED PER ECN 1434/1437	5/14/75		
E	REVISED PER ECN 1465	6/9/75		

LAST REF. DESIGNATIONS
R59
C42
CR28
Q2

NOTE:
1. ALL DIODES ARE 1N914.

A003184	RT 8 PLAYER	
NEXT ASSY	USED ON	
APPLICATION		

INTERPRET THIS DRAWING PER USASI Y14.5

UNLESS OTHERWISE SPECIFIED DIMENSIONS ARE IN INCHES
TOLERANCES ON:
FRACTIONS = ±1/16 .X = ±.1
ANGLES = ±1° .XX = ±.03
SURFACE FINISH .XXX = ±.010

MATERIAL

DRAWN BY: GLADE DATE 1/29/75
CHECKED
DESIGN ENGINEER
PROJECT ENGINEER 27 FEB 75
DOCUMENT CONTROL
APPROVED

ATARI INCORPORATED
14600 Winchester Boulevard
Los Gatos, California 95030

TITLE SCHEMATIC, COIN CONTROL BOARD

SIZE D DRAWING NO 003184 REV E

SCALE SHEET 1 OF 1

ATARI
Innovative leisure

ASSEMBLY TITLE / RT8 SYNC BOARD

P/L 003182

PARTS LIST SPECIFICATION

Drawn	
Checked 2-19-75	Mech. Eng.
Proj. Eng.	Elec. Eng

REV. E

Rev.	Description	Date	Apprv.	Rev.	Description	Date	Apprv.
A		2-4-75					
B	REV PER ECN 1143						
C	REV PER ECN 1[illegible]						
D	REV PER ECN [illegible]						
E	REV PER ECN 1390						

Item	Part Number	Qty.	DESCRIPTION
1	003183	1	Printed Circuit Board
2	37-LM309	2	LM309K Positive 5-Volt Regulator
3	78-06004	2	Heatsink, Wakefield 680-.75A
4	72-1610S	4	Screw, Mach, , Pn Hd, Phil, 6-32 x 5/8"
5	75-916S	4	Nut, Machine, Hex, 6-32
6			
7	75-056	4	Lock Washer, Internal Star, #6
8	66-071P4T	1	Rotary Switch, P.C. Mount, 1P-4T, Grayhill #71AF36-01-1-04-N
9	73-802	1	Switch Knob (Raytheon #50-5-1)
10	37-7400	6	7400 Integrated Circuit
11	37-7402	1	7402 " "
12	37-74H04	1	74H04 " "
13	37-7410	1	7410 " "
14	37-7417	2	7417 " "
15	37-7420	2	7420 " "
16	37-7427	2	7427 " "
17	37-7437	1	7437 " "
18	37-7474	1	7474 " "
19	37-7486	1	7486 " "
20	37-7490	1	7490 " "
21	37-7493	2	7493 " "
22	37-74107	2	74107 " "
23	37-74153	1	74153 " "
24	37-9316	3	9316 " "
25	003188	1	P-ROM, RT8 Check Points, 32 x 8, 256 Bit
26	003189	1	P-ROM, RT8 Racetrack, 256 x 4, 1024 Bit
27	90-101	1	14.318MHZ Crystal
28	10-5331	2	Resistor, Carbon, 5%, ¼W, 330 ohm
29	10-5681	1	Resistor, Carbon, 5%, ¼W, 680 ohm
30	10-5102	17	Resistor, Carbon, 5%, ¼W, 1K ohm
31	10-5103	8	Resistor, Carbon, 5%, ¼W, 10K ohm
32	28-101331	1	Capacitor, Mica, 330pf, 100V
33	27-101104	6	Capacitor, Ceramic, 0.1µf, 100V
34	29-011	2	Capacitor, Monolythic, .22µf, 12V
35	24-060257	2	Capacitor, Electrolytic, 250µf, 6V
36	37-7404	1	7404 INTEGRATED CIRCUIT
37	79-42116	2	SOCKET, I.C., 16 PIN

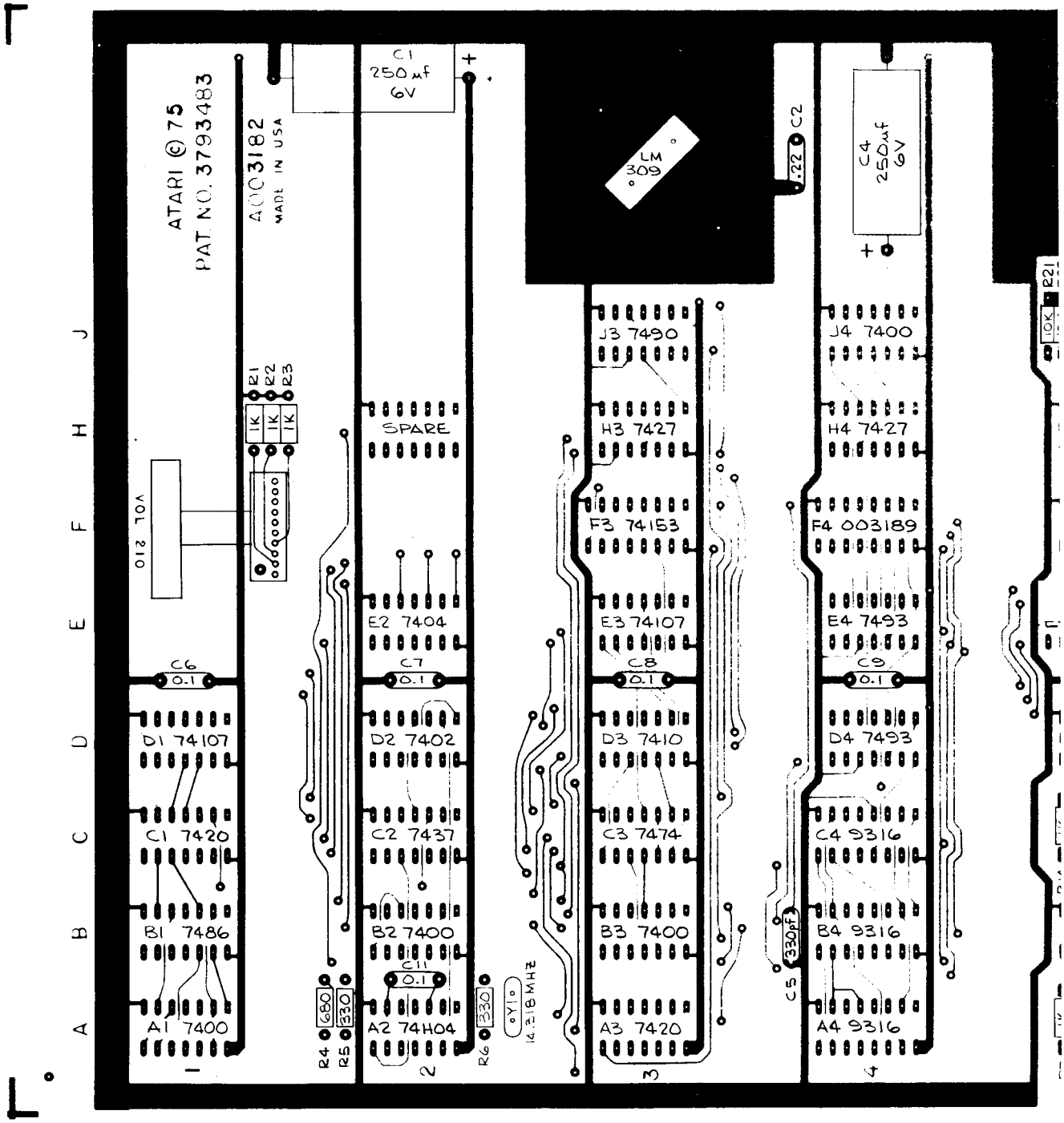
ATARI © 75
PAT. NO. 3793483
A010182
MADE IN USA
C1
250 µf
6V
LM
309
C2
.22
C4
250 µf
6V
R21
10K
R1
R2
R3
1K
1K
1K
VOL 210
SPARE
J3 7490
H3 7427
F3 74153
E3 74107
D3 7410
C3 7474
B3 7400
A3 7420
J4 7400
H4 7427
F4 003189
E4 7493
D4 7493
C4 9316
B4 9316
A4 9316
E2 7404
D2 7402
C2 7437
B2 7400
A2 74H04
D1 74107
C1 7420
B1 7486
A1 7400
C6
0.1
C7
0.1
C8
0.1
C9
0.1
C11
0.1
R4
680
R5
330
R6
330
Y1
14.318 MHz
C5
330pf
1
2
3
4
A
B
C
D
E
F
H
J

REVISIONS				
SYM	DESCRIPTION	INITIALS and DATE		
		DRFTD.	CHECK	ENGRG.
E	REVISED PER ECN 1330	4/22/75		

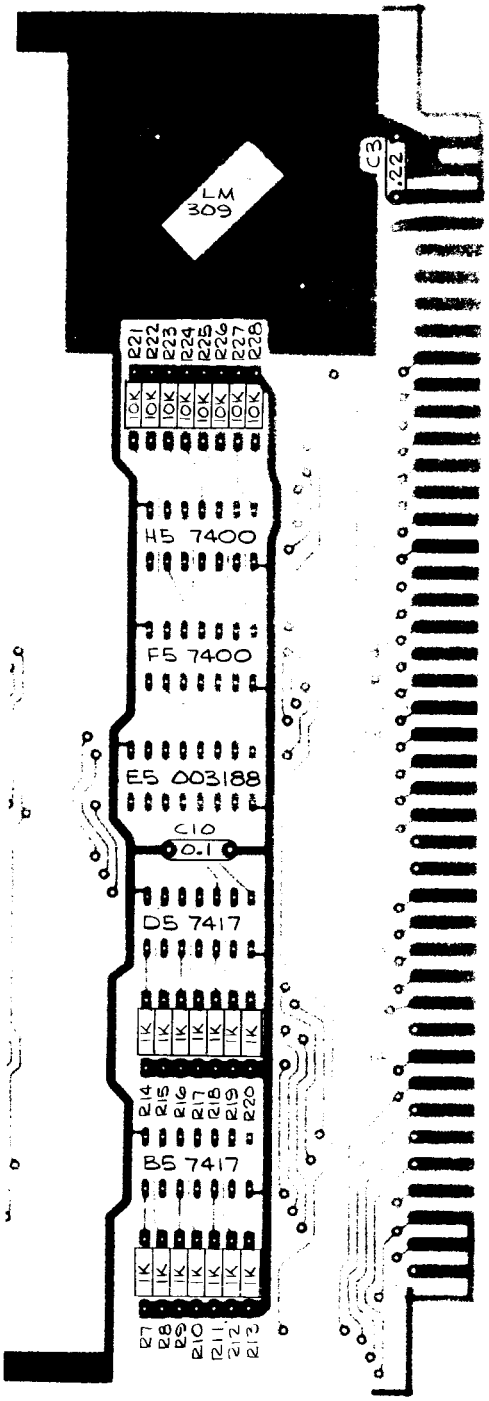

NOTES:

1. INSTALL ITEM 37 (16 PIN I.C. SOCKET) IN POSITIONS F4 AND E5.
2. THIS ASSEMBLY DRAWING TO BE USED WITH 003183 REV B P.C.BD.

NEXT ASSY	USED ON
APPLICATION	

INTERPRET THIS DRAWING PER USASI Y14.5

UNLESS OTHERWISE SPECIFIED DIMENSIONS ARE IN INCHES TOLERANCES ON:
FRACTIONS = ±1/16 .X = ±.1
ANGLES = ±1° .XX = ±.03
SURFACE FINISH ✓ .XXX = ±.010

MATERIAL
SEE
P/L 003182

DRAWN BY: CLADE DATE: 4/23/75
CHECKED
DESIGN ENGINEER
PROJECT ENGINEER
DOCUMENT CONTROL
APPROVED

ATARI

ATARI INCORPORATED
14600 Winchester Boulevard
Los Gatos, California 95030

TITLE: ASSEMBLY, SYNC BOARD

SIZE: D | DRAWING NO: A003182 | REV: E

SCALE: 2/1 | SHEET 1 OF 1

DRAWING NO | SHEET | REV

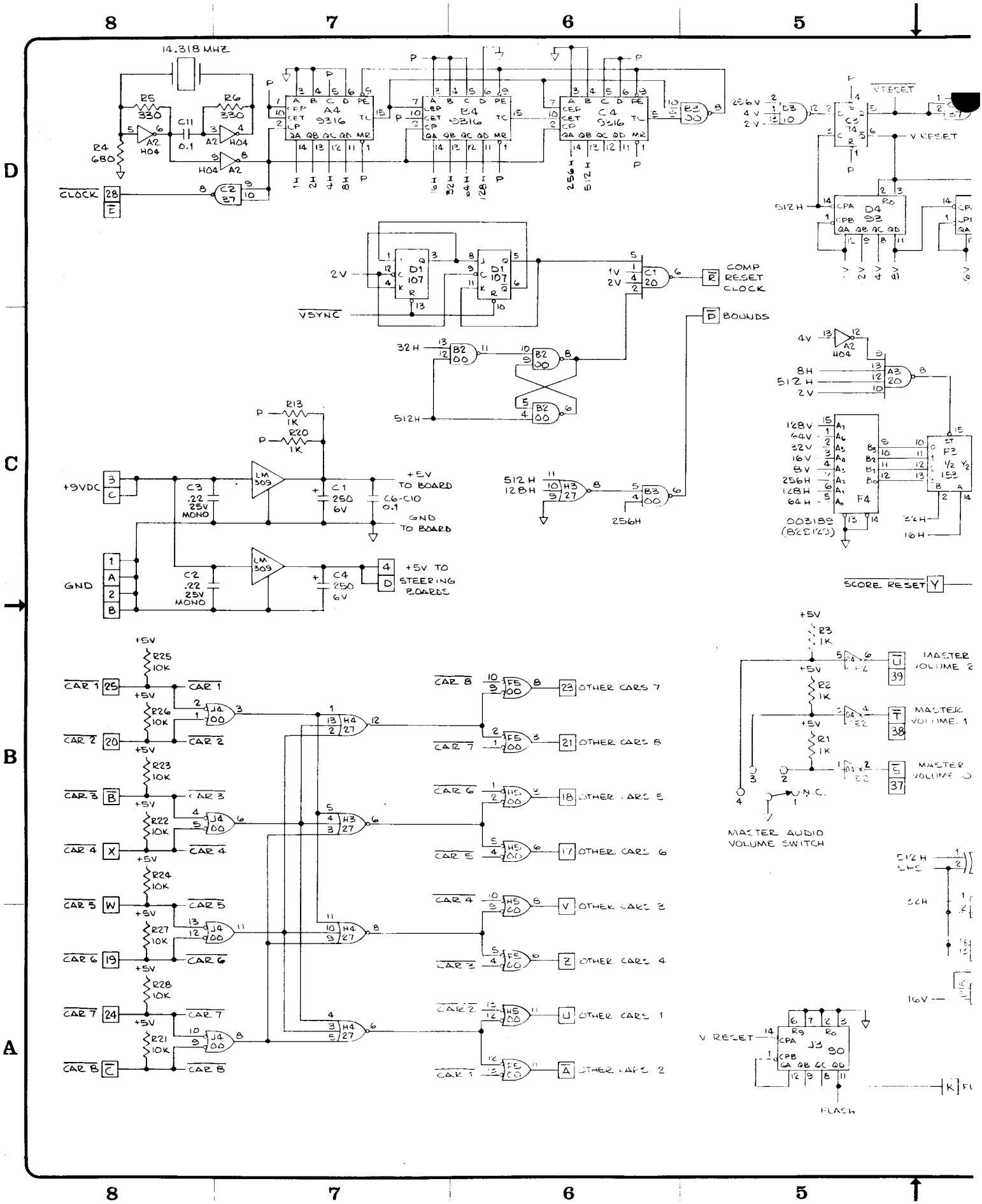
14.318 MHZ
R5 330
R6 330
C11 0.1
R4 680
A2 H04
CLOCK
A4 9316
B4 9316
C4 9316
D3 00
C2 27
V RESET
D4 93
512 H
D1 107
2V
VSYNC
C1 20
COMP RESET CLOCK
BOUNDS
32 H
B2 00
512H
4V
A2 H04
A3 20
8H
512 H
2V
128V
64V
32V
16V
8V
256H
128H
64H
F4
003189 (82S123)
F3 1/2 153
32H
16H
SCORE RESET
R13 1K
R20 1K
+9VDC
C3 .22 25V MONO
LM 309
C1 250 6V
+5V TO BOARD
C6-C10 0.1
GND TO BOARD
GND
C2 .22 25V MONO
C4 250 6V
+5V TO STEERING BOARDS
H3 27
B3 00
256H
+5V
R25 10K
R26 10K
R23 10K
R22 10K
R24 10K
R27 10K
R28 10K
R21 10K
CAR 1
CAR 2
CAR 3
CAR 4
CAR 5
CAR 6
CAR 7
CAR 8
J4 00
H4 27
F5 00
H5 00
F6 00
OTHER CARS 7
OTHER CARS 8
OTHER CARS 5
OTHER CARS 6
OTHER CARS 3
OTHER CARS 4
OTHER CARS 1
OTHER CARS 2
R3 1K
R2 1K
R1 1K
MASTER VOLUME 2
MASTER VOLUME 1
MASTER VOLUME 0
N.C.
MASTER AUDIO VOLUME SWITCH
16V
V RESET
J3 90
FLASH

REVISIONS				
SYM	DESCRIPTION	INITIALS and DATE		
		DRTG.	CHECK	ENGRG.
B	PRODUCTION RELEASE	2/10/75		
C	REVISED PER ECN 1160	2/26/75		
D	REVISED PER ECN 1252	3/25/75		
E	REVISED PER ECN 1390	4/24/75		

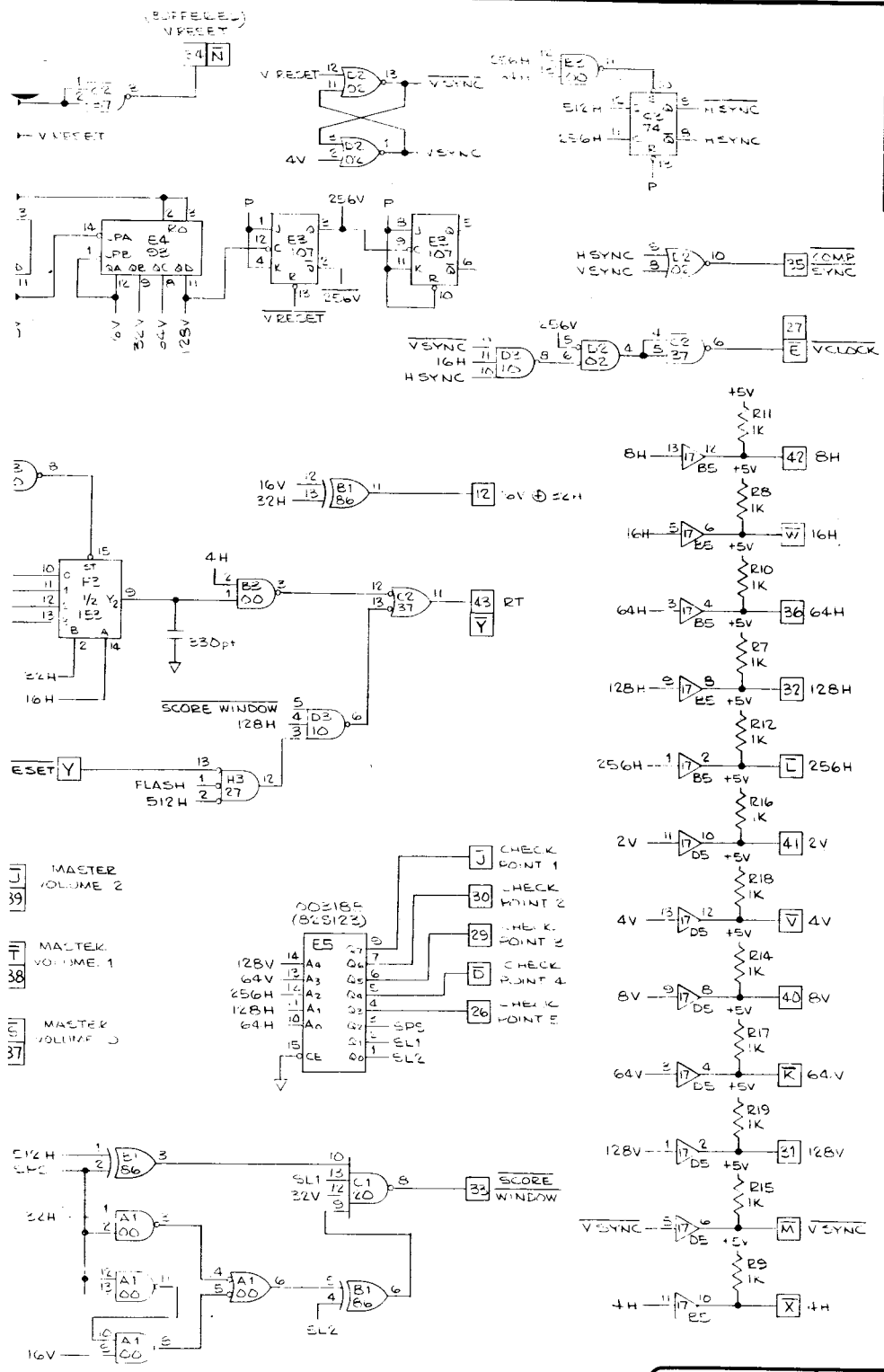

INTERPRET THIS DRAWING PER USASI Y14.5	DRAWN BY SLADE DATE 2/6/75	ATARI INCORPORATED 14600 Winchester Boulevard Los Gatos, California 95030	
UNLESS OTHERWISE SPECIFIED DIMENSIONS ARE IN INCHES TOLERANCES ON FRACTIONS ±1/16 .XX ±.1 ANGLES ±1° .XXX ±.01 SURFACE FINISH ✓ .XXXX ±.010	CHECKED		
	DESIGN ENGINEER		
	PROJECT ENGINEER		
MATERIAL	DOCUMENT CONTROL	TITLE SCHEMAT C, SYNC BOARD	
	APPROVED	SIZE D DRAWING NO. 00E182	E
A00E182 / RT 5 PLAYER		SCALE	
NEXT ASSY / USED ON			
APPLICATION			

ATARI
Innovative leisure

ASSEMBLY TITLE / RT8 SCORE BOARD

P/L 003170

PARTS LIST SPECIFICATION

Drawn	
Checked	Mech. Eng.
Proj. Eng. [illegible] 3 FEB 75	Elec. Eng [illegible] 3 FEB 75
	[illegible]

REV.

Rev.	Description	Date	Apprv.	Rev.	Description	Date	Apprv.
A		2-3-75	[illegible]				
B	Rev per ECN 1142	2-18-75	[illegible]				
C	REV PER ECN 1167	2-27-75	[illegible]				
D	[illegible] PER [illegible] 1288	4-22-75	[illegible]				
E	[illegible]		[illegible]				

Item	Part Number	Qty.	DESCRIPTION
1	003171	1	Printed Circuit Board
2	37-LM309	1	LM309K Positive 5-Volt Regulator
3	78-06005	1	Heatsink, Wakefield 680-1.0A
4	72-1412S	2	Screw, Mach., Sheetmetal, Pan Hd, Phil,6-32 x 5/8"
5	75-916S	2	Nut, Machine, Hex, 6-32
6			
7	75-056	2	Lock Washer, Internal Star, #6
8			
9			
10	37-7400	1	7400 Integrated Circuit
11	37-7402	3	7402 " "
12	37-7404	2	7404 " "
13	37-7408	2	7408 " "
14	37-7410	1	7410 " "
15	37-7432	1	7432 " "
16	37-7448	1	7448 " "
17	37-7485	3	7485 " "
18	37-7490	8	7490 " "
19	37-7493	4	7493 " "
20	37-74153	4	74153 " "
21	37-74174	1	74174 " "
22	37-74175	1	74175 " "
23	37-9301	1	9301 " "
24	37-9312	17	9312 " "
25	37-9322	1	9322 " "
26	10-5102	2	Resistor, Carbon, 5%, ¼W, 1K ohm
27	10-5103	10	Resistor, Carbon, 5%, ¼W, 10K ohm
29	28-101331	1	Capacitor, Mica, 330pf, 100V
30	27-101104	6	Capacitor, Ceramic, 0.1µf, 100V
31	29-011	1	Capacitor, Monolythic, .22µf, 12V
32	24-060257	1	Capacitor, Electrolytic, 250µf, 6V

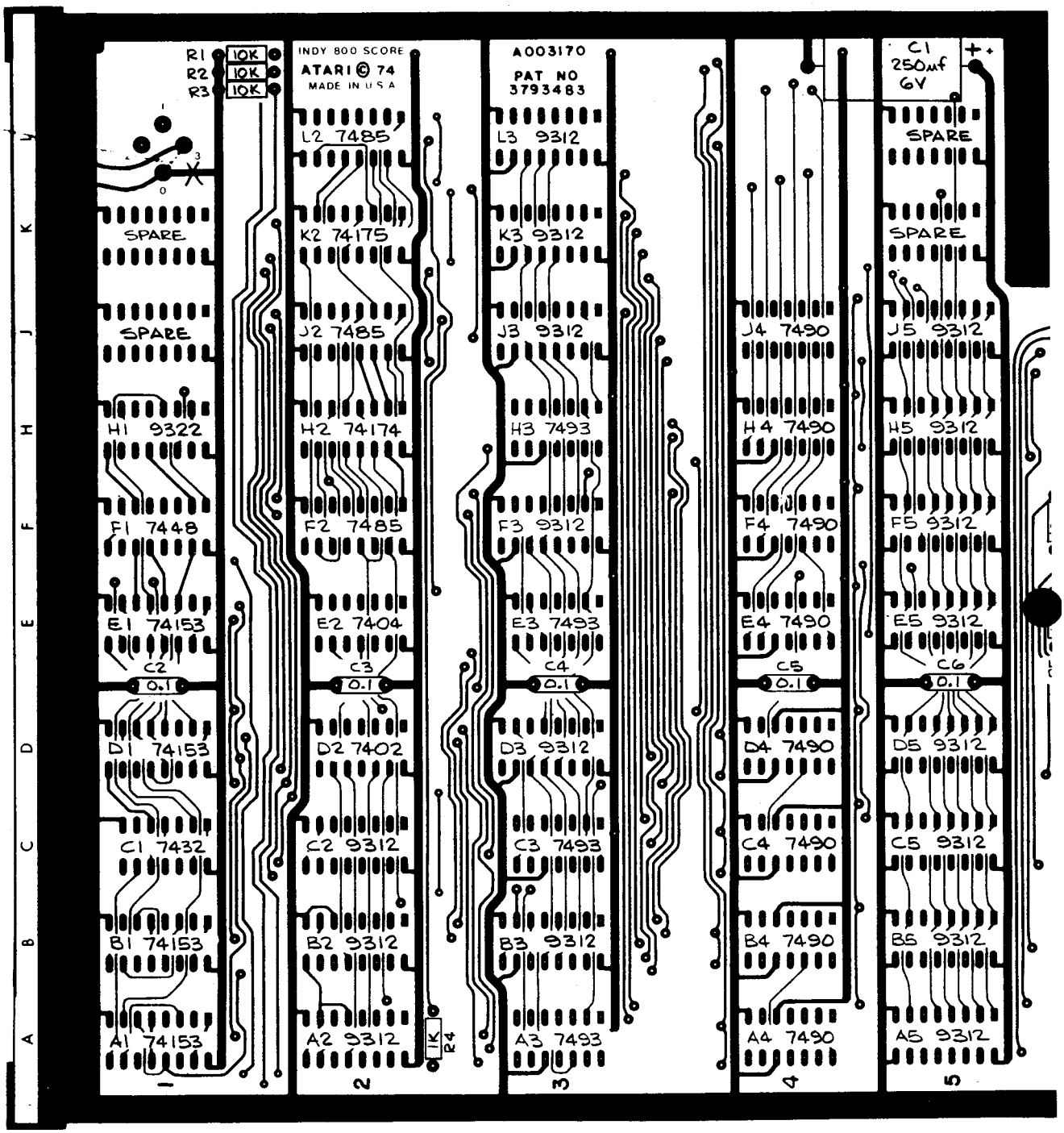
INDY 800 SCORE
ATARI © 74
MADE IN U S A
A003170
PAT NO
3793483
R1 10K
R2 10K
R3 10K
C1 250uf 6V
SPARE
SPARE
SPARE
SPARE
L2 7485
L3 9312
K2 74175
K3 9312
J2 7485
J3 9312
J4 7490
J5 9312
H1 9322
H2 74174
H3 7493
H4 7490
H5 9312
F1 7448
F2 7485
F3 9312
F4 7490
F5 9312
E1 74153
E2 7404
E3 7493
E4 7490
E5 9312
C2 0.1
C3 0.1
C4 0.1
C5 0.1
C6 0.1
D1 74153
D2 7402
D3 9312
D4 7490
D5 9312
C1 7432
C2 9312
C3 7493
C4 7490
C5 9312
B1 74153
B2 9312
B3 9312
B4 7490
B5 9312
A1 74153
A2 9312
A3 7493
A4 7490
A5 9312
1K R4
1
2
3
4
5

REVISIONS				
SYM	DESCRIPTION	INITIALS and DATE		
		DRFTG	CHECK	ENGRG
D	REVISED PER ECN 1388	4/22/75		
E	REVISED PER ECN 1431	7/10/75		

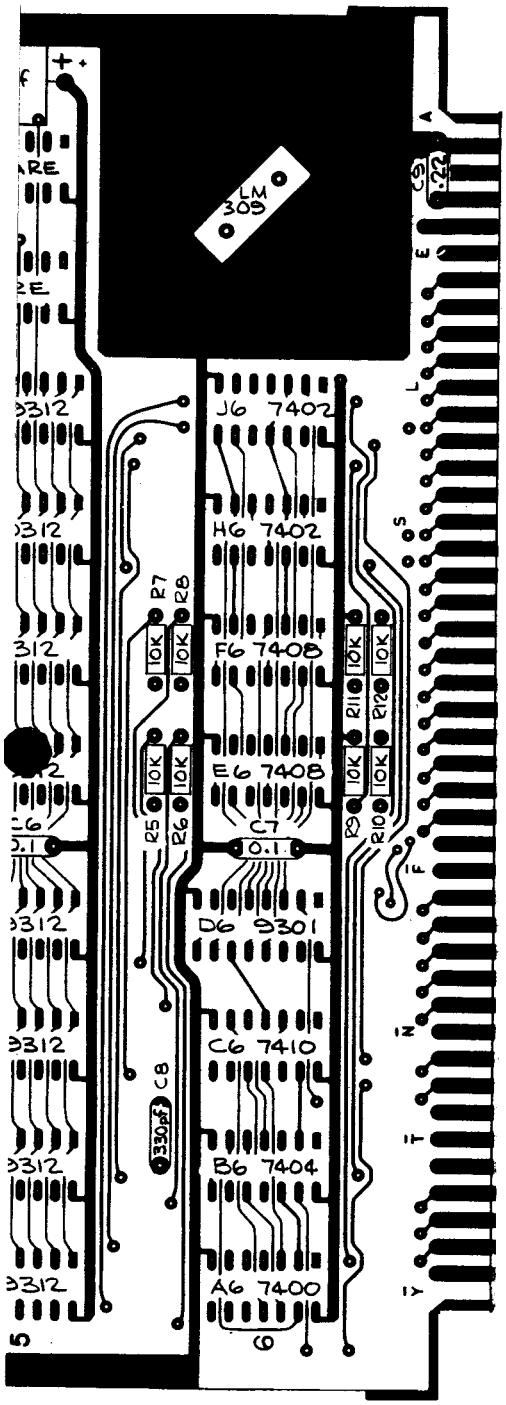

NOTE:

1. THIS ASSEMBLY DRAWING TO BE USED WITH 003171 REVISION B P.C.BD.

MODIFICATIONS:

1. CUT TRACE THAT GOES TO "0" PAD IN UPPER LEFT CORNER OF BOARD.
2. JUMPER "0" PAD TO LARGE GROUND TRACE.
3. JUMPER "3" PAD TO LARGE GROUND TRACE.

NEXT ASSY	INDY 800
USED ON	
APPLICATION	

INTERPRET THIS DRAWING PER USASI Y14.5

UNLESS OTHERWISE SPECIFIED DIMENSIONS ARE IN INCHES TOLERANCES ON:

FRACTIONS = ±1/16 x = ±.1
ANGLES = ±1° xx = ±.03
SURFACE FINISH ✓ xxx = ±.010

MATERIAL: SEE P/L 003170

DRAWN BY: SLADE DATE: 4/23/75
CHECKED
DESIGN ENGINEER
PROJECT ENGINEER: 29 APR 75
DOCUMENT CONTROL
APPROVED

ATARI

ATARI INCORPORATED
14600 Winchester Boulevard
Los Gatos, California 95030

TITLE: ASSEMBLY, SCORE BOARD

SIZE: D | DRAWING NO: A003170 | REV: E

SCALE: 2/1 | SHEET 1 OF 1

DRAWING NO | SHEET | REV

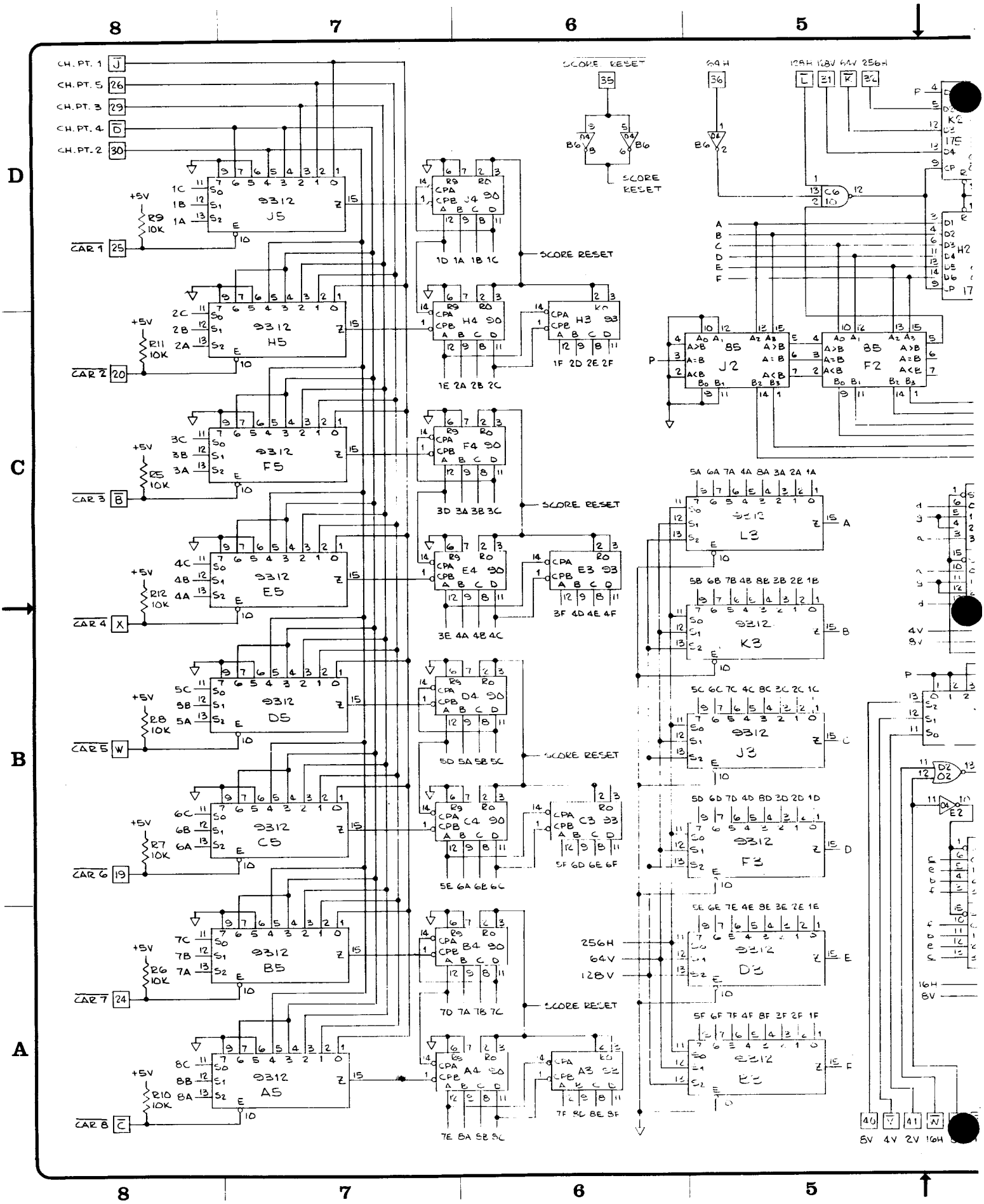
8
7
6
5
D
C
B
A
CH. PT. 1
CH. PT. 5
CH. PT. 3
CH. PT. 4
CH. PT. 2
CAR 1
CAR 2
CAR 3
CAR 4
CAR 5
CAR 6
CAR 7
CAR 8
+5V
R9 10K
R11 10K
R5 10K
R12 10K
R8 10K
R7 10K
R6 10K
R10 10K
9312 J5
9312 H5
9312 F5
9312 E5
9312 D5
9312 C5
9312 B5
9312 A5
J4 90
H4 90
H3 93
F4 90
E4 90
E3 93
D4 90
C4 90
C3 93
B4 90
A4 90
A3 93
SCORE RESET
1D 1A 1B 1C
1E 2A 2B 2C
1F 2D 2E 2F
3D 3A 3B 3C
3E 4A 4B 4C
3F 4D 4E 4F
5D 5A 5B 5C
5E 6A 6B 6C
5F 6D 6E 6F
7D 7A 7B 7C
7E 8A 8B 8C
7F 8D 8E 8F
256H
64V
128V
16H
8V
4V
2V
J2 85
F2 85
L3
K3
J3
F3
D3
E3

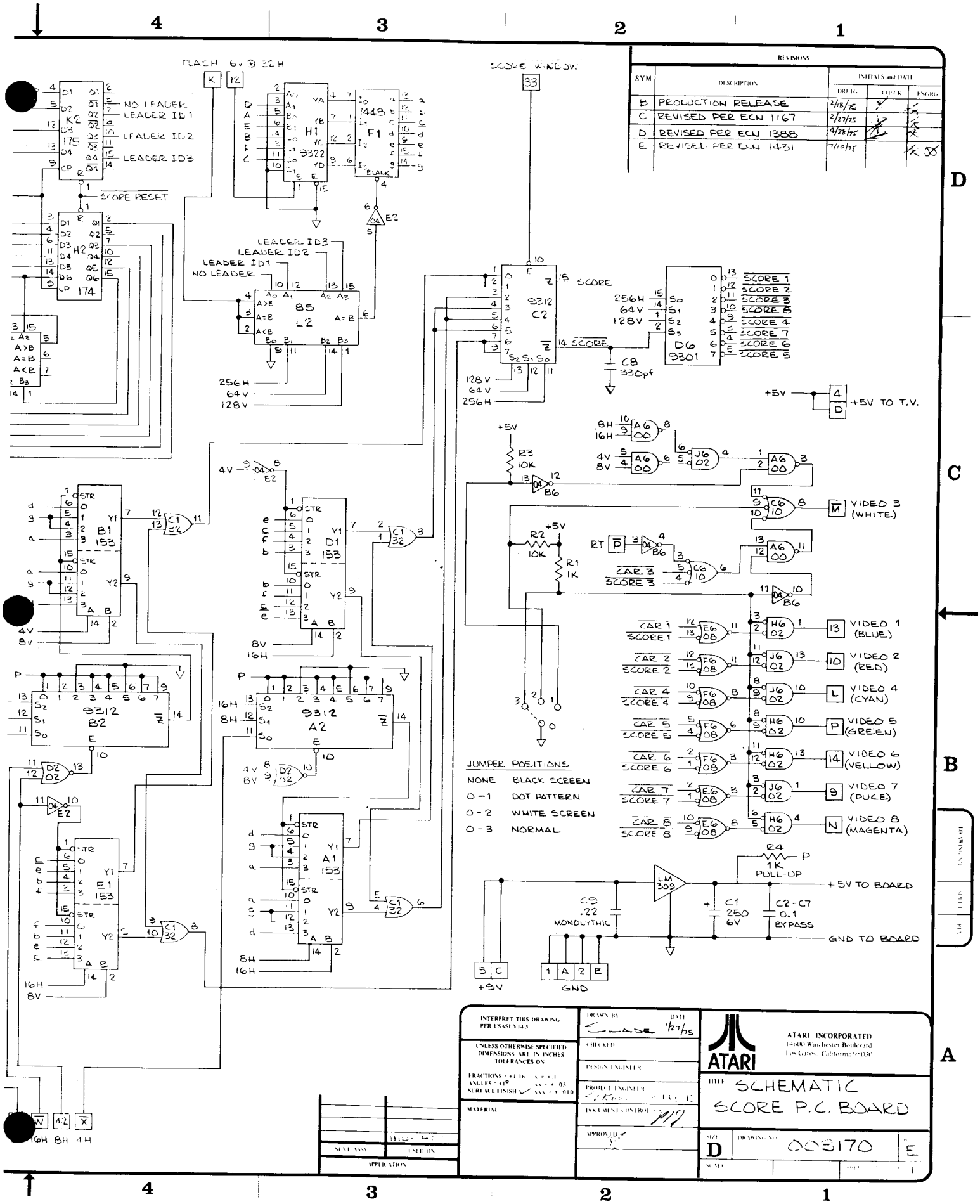
REVISIONS
SYM
DESCRIPTION
INITIALS and DATE
DRFTG.
CHECK
ENGRG.
B PRODUCTION RELEASE 2/18/75
C REVISED PER ECN 1167 2/27/75
D REVISED PER ECN 1388 4/28/75
E REVISED PER ECN 1431 7/10/75
FLASH 16V @ 32H
SCORE WINDOW
NO LEADER
LEADER ID1
LEADER ID2
LEADER ID3
SCORE RESET
K2 175
H2 174
H1 9322
F1 7448
E2
85 L2
9312 C2
SCORE
256H
64V
128V
D6 9301
SCORE 1
SCORE 2
SCORE 3
SCORE 8
SCORE 4
SCORE 7
SCORE 6
SCORE 5
C8 330pf
+5V
+5V TO T.V.
R3 10K
B6
A6 00
J6 02
C6 10
VIDEO 3 (WHITE)
R2 10K
R1 1K
RT
CAR 3
SCORE 3
VIDEO 1 (BLUE)
VIDEO 2 (RED)
VIDEO 4 (CYAN)
VIDEO 5 (GREEN)
VIDEO 6 (YELLOW)
VIDEO 7 (PUCE)
VIDEO 8 (MAGENTA)
B1 153
D1 153
E1 153
A1 153
9312 B2
9312 A2
C1 32
D2 02
JUMPER POSITIONS
NONE BLACK SCREEN
0-1 DOT PATTERN
0-2 WHITE SCREEN
0-3 NORMAL
R4 1K PULL-UP
LM 309
C9 .22 MONOLYTHIC
C1 250 6V
C2-C7 0.1 BYPASS
+5V TO BOARD
GND TO BOARD
+9V
GND
16H 8H 4H
INTERPRET THIS DRAWING PER USASI Y14.5
UNLESS OTHERWISE SPECIFIED DIMENSIONS ARE IN INCHES TOLERANCES ON
FRACTIONS = ± 1/16
ANGLES = ±1°
SURFACE FINISH
MATERIAL
NEXT ASSY
USED ON
APPLICATION
DRAWN BY
DATE
CHECKED
DESIGN ENGINEER
PROJECT ENGINEER
DOCUMENT CONTROL
APPROVED BY
ATARI
ATARI INCORPORATED
14600 Winchester Boulevard
Los Gatos, California 95030
TITLE
SCHEMATIC
SCORE P.C. BOARD
SIZE D
DRAWING NO. 003170
E
SCALE
SHEET 1

ATARI
Innovative leisure

ASSEMBLY TITLE	RT8 CAR BOARD	P/L 003000

PARTS LIST SPECIFICATION — Page 1 of 2

Drawn		
Checked	Mech. Eng.	
Proj. Eng.	Elec. Eng	REV. E

Rev.	Description	Date	Apprv.	Rev.	Description	Date	Apprv.
A		2-3-75					
C	REV PCB [illegible] 1248, 1269	3/25/75					
D	[illegible] 1251	4/28/75					
E	[illegible]	[illegible]					

Item	Part Number	Qty.	DESCRIPTION
1	002999	1	Printed Circuit Board
2	78-06004	1	Heatsink, Wakefield #680-.75A
3	37-LM309	1	LM309K Positive 5-Volt Regulator
4	37-LM340T-15	1	LM340T-15 Positive 15-Volt Regulator
5	37-7400	4	7400 Integrated Circuit
6	37-7402	2	7402 " "
7	37-7404	3	7404 " "
8	37-7406	1	7406 " "
9	37-7410	1	7410 " "
10	37-7414	1	7414 " "
11	37-7420	1	7420 " "
12	37-7474	2	7474 " "
13	37-7475	1	7475 " "
14	37-7485	1	7485 " "
15	37-7490	1	7490 " "
16	37-7492	1	7492 " "
17	37-7493	1	7493 " "
18	37-74107	2	74107 " "
19	37-74153	1	74153 " "
20	37-74193	3	74193 " "
21	003186	1	ROM, RT8 Car Video, 512 x 8, 4096 Bit
22	003187	1	P-ROM, RT8 Motion Code, 32 x 8, 256 Bit
23	37-9312	1	9312 Integrated Circuit
24	37-9316	5	9316 " "
25	37-555	2	555 Timer Integrated Circuit
26	37-LM324	1	LM324 Quad Op Amp
27	37-LM380	1	LM380 Audio Power Amp
28	34-2N3565	1	Transistor, NPN, Type 2N3565
29	003629	1	Transistor, Noise Source, 2N3643
30	35-2N3644	1	Transistor, PNP, Type 2N3644
31	31-1N914	8	Diode, Type 1N914
32	38-MV5013	2	Light Emitting Diode, Visible, Red
33	79-42424	1	24 pin Solder Socket
34	79-42116	1	16 pin Solder Socket
35	19-311103	1	10K ohm Trimpot
36	10-5151	2	Resistor, Carbon, 5%, ¼W, 150 ohm
37	10-5102	7	" " " " 1K ohm
38	10-5152	1	" " " " 1.5K ohm
39	10-5332	1	" " " " 3.3K ohm
40	10-5472	8	" " " " 4.7K ohm

ASSEMBLY TITLE RT8 CAR BOARD **P/L** 003000

PARTS LIST SPECIFICATION REV E

Item	Part Number	Qty.	DESCRIPTION
41	10-5103	9	Resistor, Carbon, 5%, ¼W, 10K ohm
42	10-5123	1	" " " " 12K ohm
43	10-5153	1	" " " " 15K ohm
44	10-5333	1	" " " " 33K ohm
45	10-5683	1	" " " " 68K ohm
46	10-5823	1	" " " " 82K ohm
47	10-5104	7	" " " " 100K ohm
48	10-5224	2	" " " " 220K ohm
49	10-5474	2	" " " " 470K ohm
50	10-5105	2	" " " " 1M ohm
51	10-5225	1	" " " " 2.2M ohm
52	10-5475	1	" " " " 4.7M ohm
53	19-311254	1	250K ohm Trimpot
54	28-101101	4	Capacitor, Mica, 100pf, 100V
55	27-101103	4	" Ceramic, .01uf, 100V
56	21-250103	1	" Film (Mylar), .01uf, 25V
57	27-101104	12	" Ceramic, 0.1uf, 100V
58	21-250104	1	" Film (Mylar), 0.1uf, 25V
59	29-011	2	" Monolythic, 0.22uf, 12V
60	24-250105	1	" Electrolytic, 1uf, 25V
61	24-250505	2	" Electrolytic, 5uf, 25V
62	24-250106	4	" Electrolytic, 10uf, 25V
63	24-250507	1	" Electrolytic, 500uf, 25V
64	72-1412S	2	Screw, Mach, Sht Mtl, Pn Hd, Phil, 6-32 x 5/8"
65	75-916S	2	Nut, Machine, Hex, 6-32
66			
67	75-056	2	Lock Washer, Internal Star, #6
68	31-1N4001	2	DIODE, 1N4001

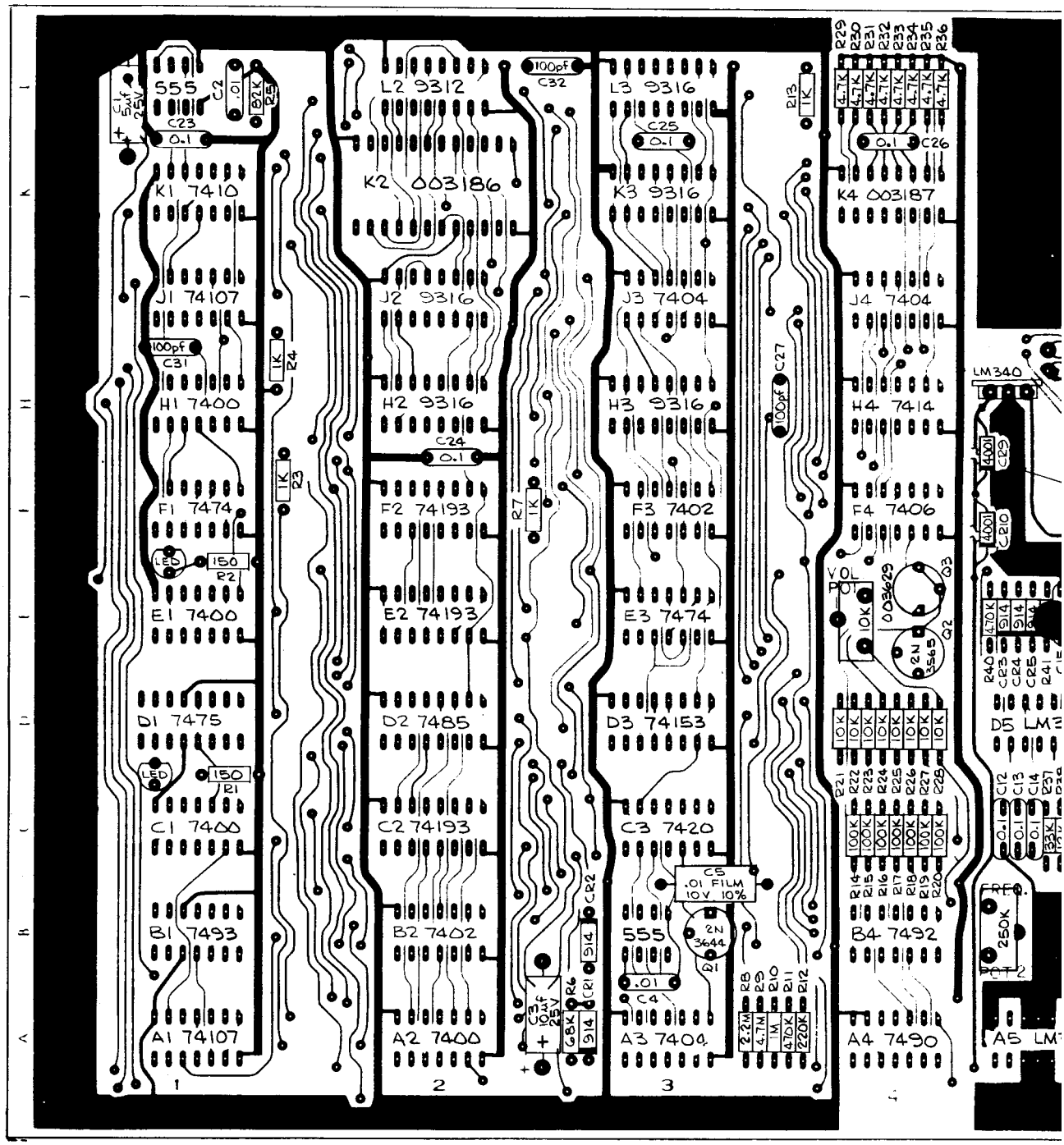
555
C1 5uf 25V
C2 .01
82K R25
C23 0.1
K1 7410
J1 74107
100pf C31
H1 7400
F1 7474
LED
150 R2
E1 7400
D1 7475
LED
150 R1
C1 7400
B1 7493
A1 74107
1K R24
1K R23
L2 9312
K2 003186
J2 9316
H2 9316
C24 0.1
F2 74193
E2 74193
D2 7485
C2 74193
B2 7402
A2 7400
100pf C32
R7 1K
C3 1uf 25V
R6 68K
CR1 914
CR2 914
L3 9316
C25 0.1
K3 9316
J3 7404
H3 9316
F3 7402
E3 7474
D3 74153
C3 7420
C5 .01 FILM 10V 10%
2N 3644 Q1
555
.01 C4
A3 7404
R13 1K
100pf C27
R8 2.2M
R9 4.7M
R10 1M
R11 470K
R12 220K
R29 R30 R31 R32 R33 R34 R35 R36 4.7K
0.1 C26
K4 003187
J4 7404
H4 7414
F4 7406
VOL POT 10K
003629 Q3
2N 3565 Q2
R21 R22 R23 R24 R25 R26 R27 R28 10K
R14 R15 R16 R17 R18 R19 R20 100K
B4 7492
A4 7490
LM340
4001 C29
4001 C210
470K R40
914 CR3
914 CR4
914 CR5
R41
D5 LM3
C12 0.1
C13 0.1
C14 0.1
R37 33K
FREQ. 250K POT 2
A5 LM

REVISIONS				
SYM	DESCRIPTION	INITIALS and DATE		
		DRFTG	CHECK	ENGRG
D	REVISED PER ECN 1391	4/24/75		
E	REVISED PER ECN 1428	3/12/75		

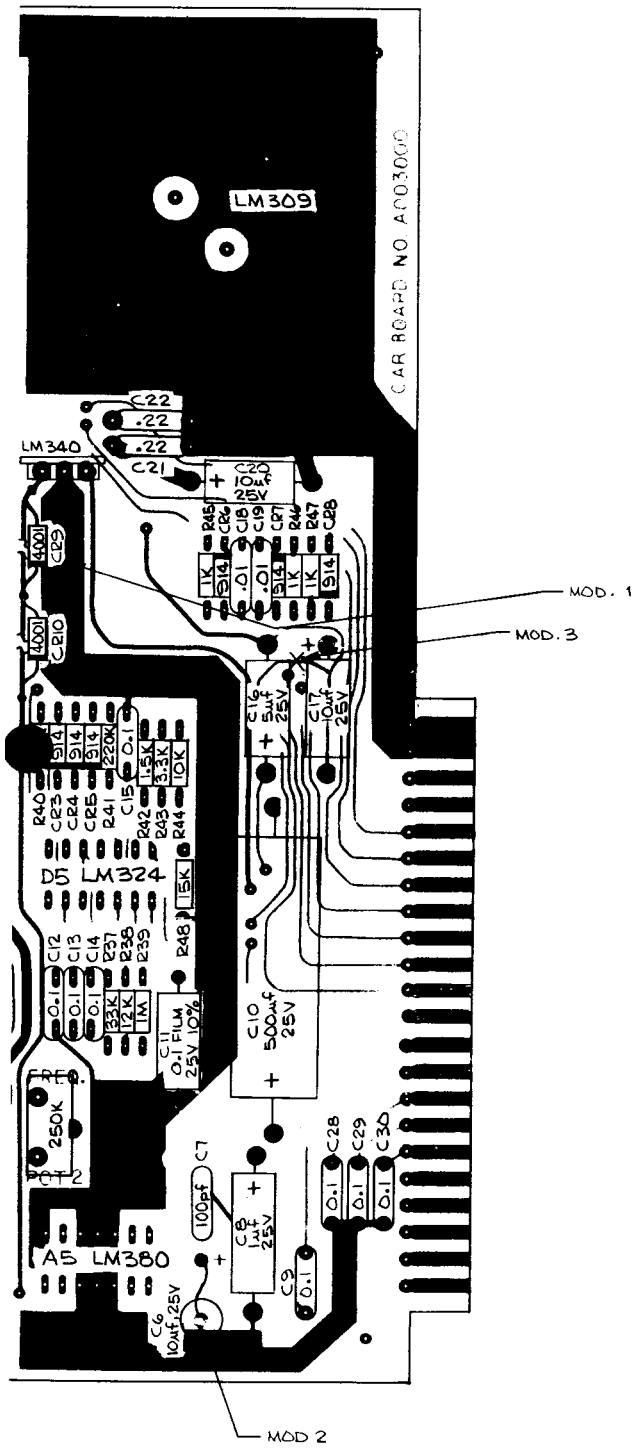

NOTES:

1. LED'S TO BE MOUNTED POINTING TOWARDS BACK OF BOARD AND LAYING DOWN.
2. THIS ASSEMBLY TO BE USED WITH 002999 REVISION "B" P.C. BOARD.

MODIFICATIONS : (TO REVISION "B" AND REVISION "C" 002999 BOARDS).

1. INSTALL TWO 1N4001 DIODES IN SERIES AS SHOWN, CUTTING TRACE UNDERNEATH EACH DIODE.
2. INSTALL 10uf 25V CAPACITOR AS SHOWN, STANDING UP.

MODIFICATION : (TO REVISION "B" 002999 BOARDS ONLY)

3. CUT TRACE AS INDICATED. JUMPER + (POSITIVE) END OF C17 (10uf/25V) CAPACITOR TO D5 PIN 2 (LM324).

DRAWING NO | SHEET | REV

INTERPRET THIS DRAWING PER USASI Y14.5

UNLESS OTHERWISE SPECIFIED DIMENSIONS ARE IN INCHES TOLERANCES ON:
FRACTIONS = ±1/16 x = ±.1
ANGLES = ±1° xx = ±.03
SURFACE FINISH ✓ xxx = ±.010

MATERIAL: SEE P/L 003000

DRAWN BY: Slade DATE 4/25/75
CHECKED
DESIGN ENGINEER
PROJECT ENGINEER 29 Apr 75
DOCUMENT CONTROL
APPROVED

NEXT ASSY | USED ON: INDY 800
APPLICATION

ATARI INCORPORATED
14600 Winchester Boulevard
Los Gatos, California 95030

TITLE: ASSEMBLY, CAR BOARD

SIZE: D | DRAWING NO: A003000 | REV: E
SCALE: 2/1 | SHEET 1 OF 1

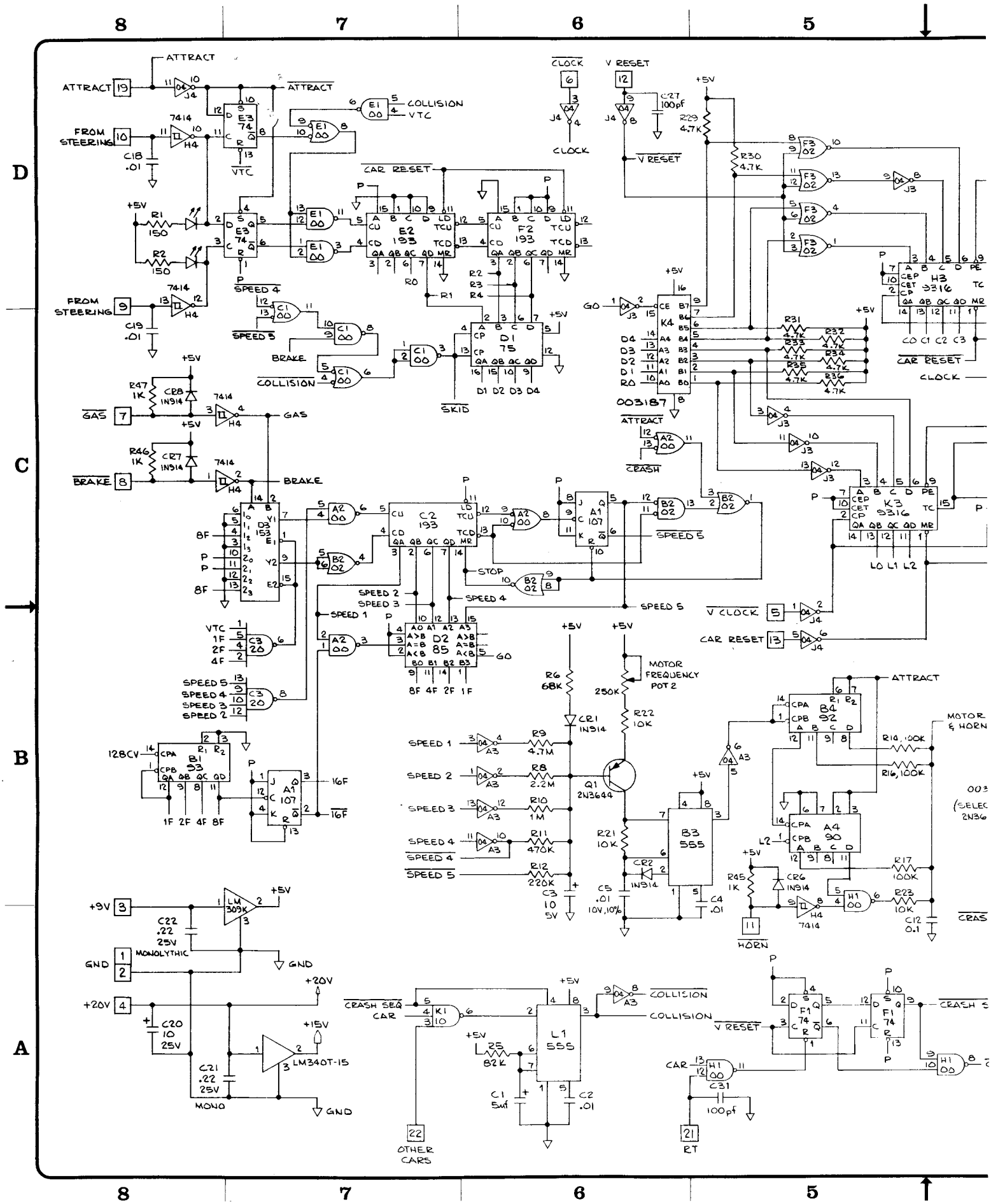
ATTRACT
FROM STEERING
C18 .01
C19 .01
7414
E3 74
VTC
SPEED 4
SPEED 5
BRAKE
COLLISION
CAR RESET
E2 193
F2 193
R0
R1
R2
R3
R4
D1 75
D1 D2 D3 D4
SKID
CLOCK
V RESET
C27 100pf
R29 4.7K
R30 4.7K
F3 02
H3 9316
CO C1 C2 C3
K4
003187
CRASH
K3 9316
LO L1 L2
GAS
R47 1K
CR8 1N914
R46 1K
CR7 1N914
D3 153
C2 193
A1 107
B2 02
STOP
SPEED 1
SPEED 2
SPEED 3
SPEED 4
SPEED 5
D2 85
8F 4F 2F 1F
GO
V CLOCK
VTC 1F 2F 4F
C3 20
128CV
B1 93
16F
MOTOR FREQUENCY POT 2
250K
R22 10K
R6 68K
CR1 1N914
R9 4.7M
R8 2.2M
R10 1M
R11 470K
R12 220K
C3 10 5V
Q1 2N3644
R21 10K
CR2 1N914
C5 .01 10V,10%
B3 555
C4 .01
B4 92
R14, 100K
R16, 100K
A4 90
R17 100K
R23 10K
C12 0.1
R45 1K
CR6 1N914
HORN
MOTOR & HORN
+9V
LM 309K
C22 .22 25V MONOLYTHIC
GND
+20V
C20 10 25V
+15V
LM340T-15
C21 .22 25V MONO
CRASH SEQ CAR
K1
L1 555
R25 82K
C1 5uf
C2 .01
COLLISION
OTHER CARS
F1 74
H1 00
C31 100pf
RT

REVISIONS				
SYM	DESCRIPTION	INITIALS and DATE		
		DR'FG	CHECK	ENGRG
A	PRODUCTION RELEASE	2/14		
B	REVISED PER ECN 1166	2/27/75		
C	REVISED PER ECN 1248, 1269	3/25/75		
D	REVISED PER ECN 1391	4/28/75		
E	REVISED PER ECN 1428	5/12/75		

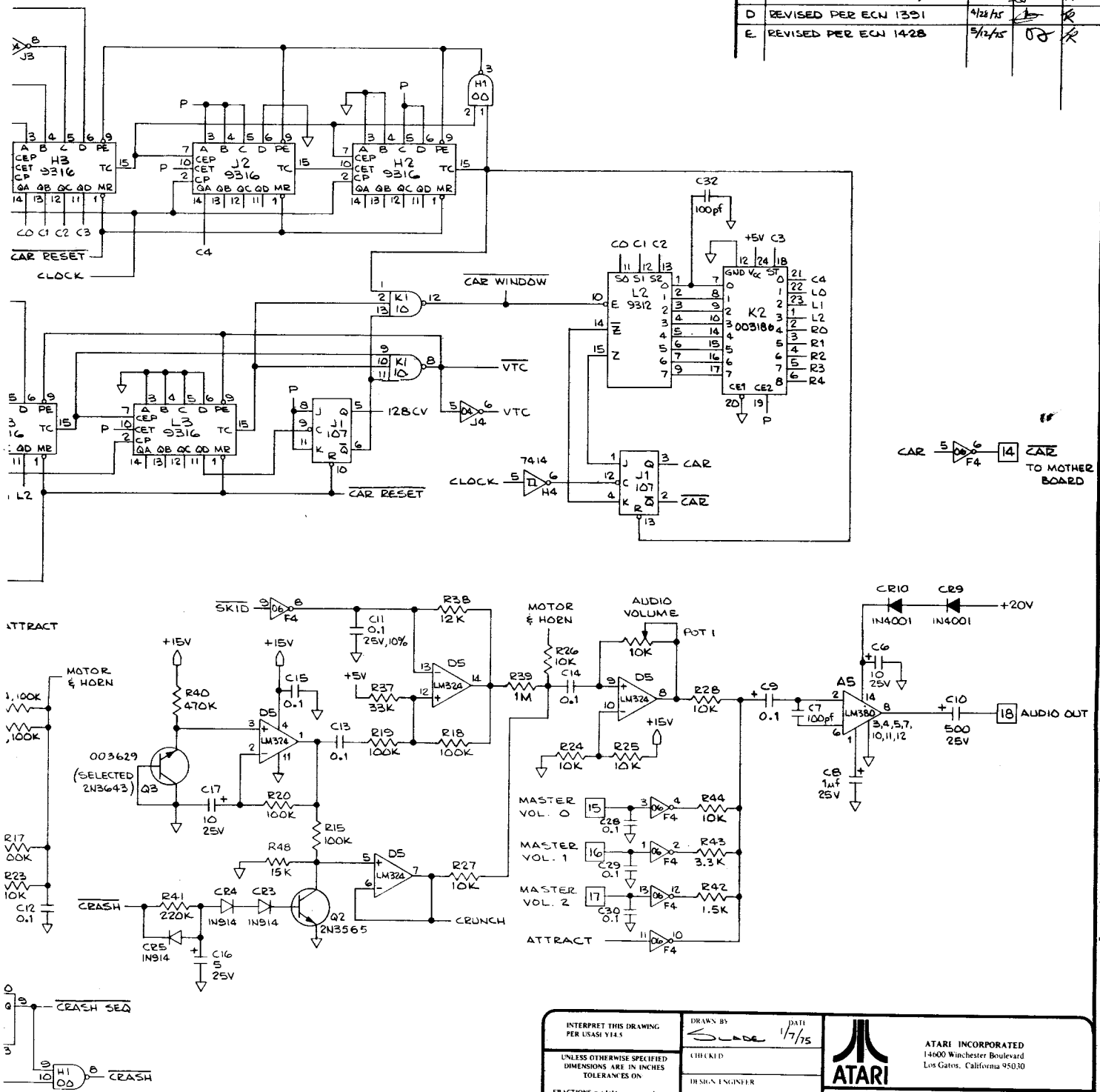

INTERPRET THIS DRAWING PER USASI Y14.5

UNLESS OTHERWISE SPECIFIED DIMENSIONS ARE IN INCHES TOLERANCES ON

FRACTIONS = ±1/16 .X = ±.1
ANGLES = ±1° .XX = ±.03
SURFACE FINISH ✓ .XXX = ±.010

MATERIAL

DRAWN BY: Slade DATE 1/7/75
CHECKED
DESIGN ENGINEER
PROJECT ENGINEER 18 Feb 75
DOCUMENT CONTROL
APPROVED 2/13/75

NEXT ASSY | USED ON
APPLICATION

ATARI INCORPORATED
14600 Winchester Boulevard
Los Gatos, California 95030

TITLE: SCHEMATIC CAR BOARD

SIZE D | DRAWING NO 003000 | REV E

SCALE — | SHEET 1 OF 1