This document has been downloaded from:

The largest resource for amusement machines documentation on the world wide web!

FLIPPERSPILL.COM

GAME NOS. 935, 936 & 937
JANUARY, 1981

MIDWAY'S RALLY-X

PARTS AND OPERATING MANUAL

#935-UPRIGHT #936-COCKTAIL #937-MINI

MIDWAY MFG. CO.
A BALLY COMPANY
10750 WEST GRAND AVENUE
FRANKLIN PARK, ILLINOIS 60131
U.S.A.

PHONE: (312) 451-1360 CABLE ADDRESS: MIDCO TELEX NO.: 72-1596

M NO. 0933-00300-0000

GENERAL INSTRUCTIONS FOR RALLY-X UPRIGHT

INSTALLATION

1. Remove shipping cleats located on bottom of cabinet.
2. Install four (4) provided leg levelers to bottom of cabinet and level cabinet.
3. The power is controlled by a switch located on top of the cabinet. Additional taps have been provided on the transformer to compensate for fluctuating line voltage.
4. Upright only - To remove protective paper coating from decal - each side of cabinet, soak paper with water to soften and carefully start "peel back" of paper with fingernail. Peel paper parallel to cabinet side. "DO NOT PULL OUT".

LINE VOLTAGE SAFETY SWITCH

A line voltage safety switch has been provided for your protection. It is located on the right rear side of the cabinet in the back door area. When the back door is removed, it opens the circuit to the line voltage. To restore power (when servicing), pull switch fully out.

VOLUME CONTROL

The volume control pot is located on the Game Logic Board (P.C. A082-91385-C000). This pot controls the volume of all sounds and may be varied as desired by rotating pot control.

ADJUSTMENT SWITCHES

Located on Game Logic Board (P.C. A082-91385-C000) and may be adjusted as indicated on separate instruction card in back box area.

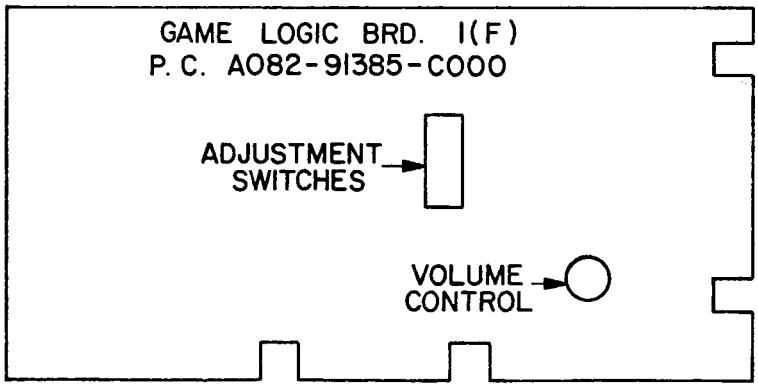

TO REMOVE CONTROL PANEL AND MONITOR DISPLAY GLASS

1. Open coin door.
2. Release two (2) clamps located below Control Panel on each side of cabinet.
3. Disconnect control panel jack.
4. Remove control panel.
5. Remove monitor display glass.

CREDIT PUSH BUTTON SWITCH

Located in cash box area and is readily accessible by opening coin door. This switch is provided as a test aid and awards one credit without advancing coin meter.

WARNING: This equipment Generates, Uses and can Radiate Radio Frequency Energy and if not installed and used in accordance with the Instruction Manual, may cause interference to Radio Communications. As temporarily permitted by Regulation it has not been tested for compliance to Subpart J or Part 15 of FCC Rules, which are designed to provide reasonable protection against such interference. Operation of this equipment in a Residential Area is likely to cause interference in which case the user at his own expense will be required to take whatever measures may be required to correct the interference.

M051-00935-A003

GENERAL INSTRUCTIONS FOR RALLY-X MINI

INSTALLATION

1. Remove shipping cleats located on bottom of cabinet.
2. Install four (4) provided leg levelers to bottom of cabinet and level cabinet.
3. The power is controlled by a switch located on the back of the cabinet. Additional taps have been provided on the transformer to compensate for fluctuating line voltage.

LINE VOLTAGE SAFETY SWITCH

A line voltage safety switch has been provided for your protection. It is located on the right rear side of the cabinet in the back door area. When the back door is removed, it opens the circuit to the line voltage. To restore power (when servicing), pull switch fully out.

VOLUME CONTROL

The volume control pot is located on the Game Logic Board (P.C. A082-91385-C000). This pot controls the volume of all sounds and may be varied as desired by rotating pot control.

ADJUSTMENT SWITCHES

Located on Game Logic Board (P.C. A082-91385-C000) and may be adjusted as indicated on separate instruction card in back box area.

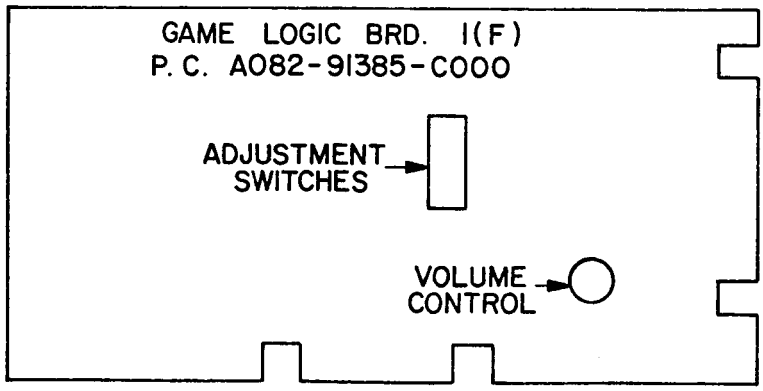

TO REMOVE CONTROL PANEL AND MONITOR DISPLAY GLASS

1. Open coin door.
2. Release two (2) clamps located below Control Panel on each side of cabinet.
3. Disconnect control panel jack.
4. Remove control panel.
5. Remove monitor display glass.

TEST SLIDE AND CREDIT PUSH BUTTON SWITCH

Located to right of cash box and is readily accessible by opening coin door. When placed in "ON" position, this switch indicates test mode. The credit push button switch is provided as a test aid and awards one credit without advancing coin meter.

GENERAL INSTRUCTIONS FOR RALLY-X COCKTAIL TABLE

INSTALLATION

1. Remove shipping cleats located on bottom of cabinet.
2. Install four (4) provided leg levelers to bottom of cabinet and level cabinet.
3. The power is controlled by a switch located on the bottom of the cabinet. Additional taps have been provided on the transformer to compensate for fluctuating line voltage.

LINE VOLTAGE SAFETY SWITCH

A line voltage safety switch has been provided for your protection. It is located in the cabinet on the left side of the coin door. When the coin door is opened the circuit to the line voltage is interrupted. To restore power (when servicing), pull switch fully out.

VOLUME CONTROL

The volume control pot is located on the Game Logic Board (P.C. A082-91385-C000). The pot controls the volume of all sounds and may be varied as desired by rotating pot control.

ADJUSTMENT SWITCHES

Located on Game Logic Board (P.C. A082-91385-C000) and may be adjusted as indicated on separate instruction card in back box area.

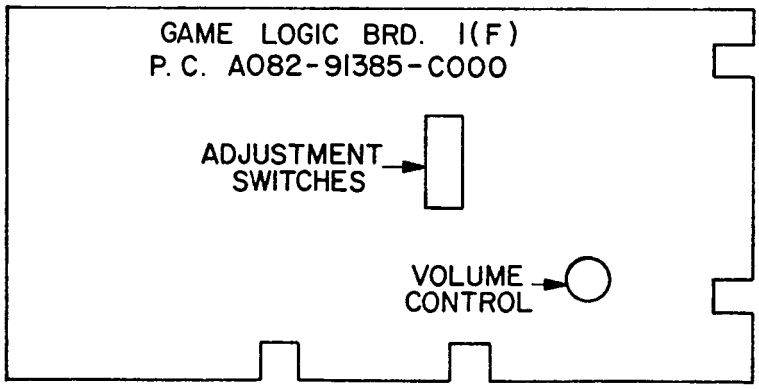

TEST SLIDE AND CREDIT PUSH BUTTON SWITCH

Located to the right of cash box and is readily accesssible by opening coin door. When placed in "ON" position, this switch indicates test mode. The credit push button switch is provided as a test aid and awards one credit without advancing coin meter.

M051-00936-A003

TO SERVICE MONITOR, GAME BOARD AND TRANSFORMER ASSY.

1. Open coin box door and release two (2) clamps indicated on sketch below.
2. Grasp monitor mounting panel at ''A'' and open as indicated in sketch below.

Caution: Due to the weight of the monitor extreme care must be exercised when opening cabinet for service.

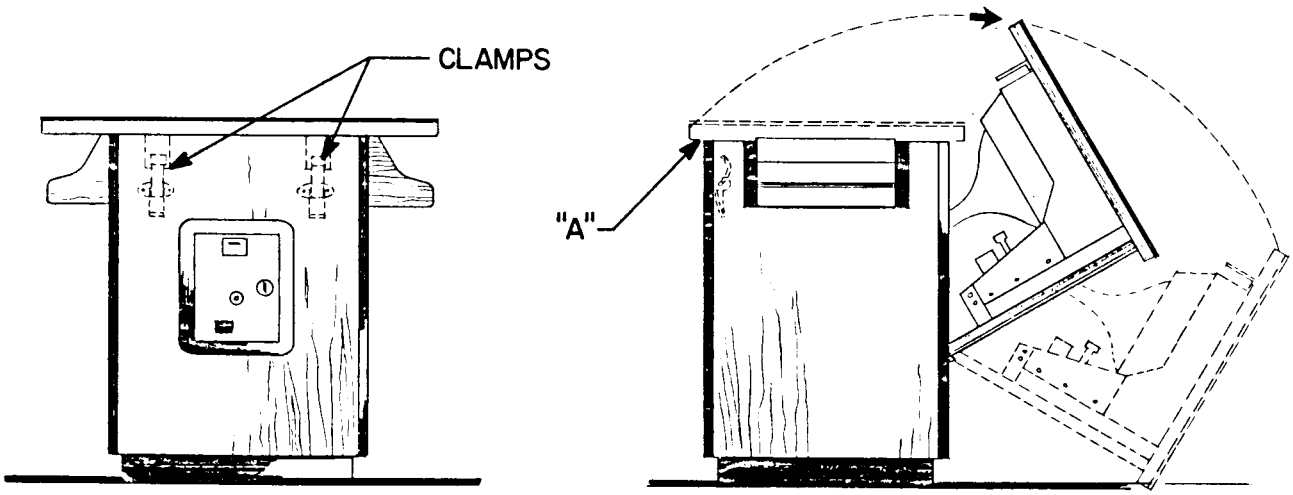

ELECTRICAL BULLETIN:

FOR ALL APPARATUS COVERED BY THE CANADIAN STANDARDS ASSOCIATION (CSA) STANDARD C22.2 NO. 1, WHICH EMPLOYS A SUPPLY CORD TERMINATED WITH A POLARIZED 2-PRONG ATTACHMENT PLUG.

CAUTION:

TO PREVENT ELECTRIC SHOCK DO NOT USE THIS (POLARIZED) PLUG WITH AN EXTENSION CORD, RECEPTACLE OR OTHER OUTLET UNLESS THE BLADES CAN BE FULLY INSERTED TO PREVENT BLADE EXPOSURE.

ATTENTION:

POUR PREVENIR LES CHOCS ELECTRIQUES NE PAS UTILISER CETTE FICHE POLARISEE AVEC UN PROLONGATEUR. UNE PRISE DE COURANT OU UNE AUTRE SORTIE DE COURANT, SAUF SI LES LAMES PEUVENT ETRE INSEREES A FOND SANS EN LAISSER AUCUNE PARTIE A DECOUVERT.

CAUTIONARY NOTES IN SETTING UP PROCEDURE

Care in Setting Up

1. Place machine a sufficient distance from the wall and on a strong, level surface.
2. Do not place in dusty or damp locations or where the sun's rays will beat directly on the machine. Also, in order to avoid the interior of the machine's overheating, do not place near heaters.
3. Do not place in front of emergency or fire exits or in front of locations where fire fighting equipment or extinguishers are stored.
4. Make sure the ground wire on machine is connected to the ground.
5. Check to see whether all of the connectors on the PC boards, etc. are connected.
6. Check if the electric power switch is turned "ON", and game is plugged in.

Caution after Setting Up

Be very careful when inspecting and checking the machine because there are places in the monitor with high electrical voltage.

Control circuits are all composed of IC's for long life, but on the other hand according to the way it is set up, these can be instantly destroyed; therefore, take special care with the following points:

1. Make sure the electric power is shut off when replacing parts or when removing connectors, etc.
2. PC board repairs are to be done by the seller — do not handle in any case. Above all else, never conduct test with the tester, etc. The voltage in the tester can ruin the IC's.
3. When connecting the connectors, be careful not to reverse the direction of the connectors.

   When shipping PC boards use plastic airmats or other such protective material.

   When pulling the electric power source, always hold the plug — never pull the cord.

Self-Test

The self-test is the same as the inspection of an automobile. If possible, it is best to do this each day. Rally-X has Self-Test capabilities and using the Test Switch most parts can be tested.

1. Automatic Self-Test
   When the power in Rally-X is turned on the Self-Test automatically begins. If there is no problem in the PC boards it will change automatically into the "Attract Mode", when there is a problem the Self-Test is repeated and the words "BAD RAM" or "BAD ROM" will appear on the screen. Even if the problem cannot be located, do not go on to other test switches or volume test, but carry out the Self-Test using the Test-Switch.

Note: When the problem has been located using the results of the Self-Test, contact the place of purchase of the machine.

2. Self-Test Using the Test Switch
   The slide switch on the opposite side when the selector switch is opened is the Test Switch. Turn the Test Switch "ON". The Self-Test will start (Normally this switch is OFF). The figures and words of the Test Mode will appear on the screen in 10 seconds.

RALLY-X TEST MODE

Game is in test mode for a moment immediately after power is turned on or when test switch is on. When test switch is returned to "OFF" the game goes into attract mode.

1. ROM TEST
   The ROM data are checked 4K bytes at a time, and then checked together over all. If there are irregularities, the screen will display, for example, "ROM 1" or the like, identifying the bad ROM by number. The test series will not proceed to the RAM test. When there are no irregularties, "ROM OK" will be displayed and the RAM test will then be performed. The character ROM is not checked.

The position of the ROMs on the PCB
as given by the ROM test message

Test Message	Position of ROM and PCB		
ROM 1	1B or 1C	1B	1D
ROM 2	1D or 1E	1D	
ROM 3	1H or 1J	1H	1K
ROM 4	1K or 1L	1K	
	MB8516 (EPROM)	UPD2332 TMM333	UPD2364

2. RAM TEST
   Each of the 12 ICCs numbered 2114 are checked and when any irregularity is found a message (e.g. RAM 1L) is displayed and the test series stops. If there are no irregularities tests of game sounds and switches can begin.
   The RAM test is performed only on ICCs numbered 2114

Position of RAMs on PCB
as given by test message

Test Message	Position of RAM on PCB
RAM 1L	6C
RAM 1H	6A
RAM 2L	6D
RAM 2H	6B
RAM 3L	6K
RAM 3H	6J
RAM 4L	6L
RAM 4H	6H
RAM 5L	6M
RAM 5H	6F
RAM 6L	6N
RAM 6H	6E

3. SWITCH & SOUND TEST

The following sounds are made when switches are depressed:

SWITCH	SOUND
Coin sw 1, 2	sound made when coin is deposited
service sw	service sound
1 player start	start music
2 players start	music played before challenging stage
plyr 1 cntrl sw up	fuel warning
plyr 1 cntrl sw down	sound made when fuel added to score
plyr 1 cntrl sw right	sound made when special check pt cleared
plyr 1 cntrl sw left	sound made when check pt cleared
plyr 1 cntrl sw smoke scrn	sound made when bonus car received
*plyr 2 cntrl sw up	sound made when one full pattern is cleared
*plyr 2 cntrl sw down	BGM
*plyr 2 cntrl sw right	crash noise
*plyr 2 cntrl sw left	high score noise
*plyr 2 cntrl sw smoke scrn	sound of car running

*Applies only to table model

If player one and player two's smoke screen buttons are depressed at the same time, the display flip-flops and the smoke screen sound is made.

If the test switch is pressed to off and back to on within one second while the smoke screen buttons are depressed, a cross-hatch pattern will appear. In the table model one edge and in the upright model two edges of the pattern will not appear.

7K BAD CAN CAUSE LOSS of all color or all video.

SWITCH ADJUSTMENTS

METHOD OF PLAY (RALLY-X)		
SW. #1	SW. #2	
OFF	OFF	1 COIN, 1 CREDIT
OFF	ON	1 COIN, 2 CREDIT
ON	OFF	2 COINS, 1 CREDIT
ON	ON	FREE PLAY

DIFFICULTY & NUMBER OF CARS PER CREDIT		
SW. #3	SW. #4	SW. #5
ON	ON	ON LOW DIFF, 2 CARS
ON	ON	OFF LOW DIFF, 3 CARS
ON	OFF	ON MID DIFF, 1 CARS
ON	OFF	OFF MID DIFF, 2 CARS
OFF	ON	ON MID DIFF, 3 CARS
OFF	ON	OFF HIGH DIFF, 1 CARS
OFF	OFF	ON HIGH DIFF, 2 CARS
OFF	OFF	OFF HIGH DIFF, 3 CARS

BONUS CARS		
SW. #6	SW. #7	
ON	OFF	1 CAR GAME 10,000 PTS.
		2 CAR GAME 15,000 PTS.
		3 CAR GAME 20,000 PTS.
OFF	ON	1 CAR GAME 20,000 PTS.
		2 CAR GAME 30,000 PTS.
		3 CAR GAME 40,000 PTS.
OFF	OFF	1 CAR GAME 30,000 PTS.
		2 CAR GAME 40,000 PTS.
		3 CAR GAME 60,000 PTS.

SW. #8	
OFF	PLAY MODE
ON	LOCKS PICTURE

M051-00935-A014

PLAYING INSTRUCTIONS

- 1 or 2 persons can play.
- By moving the control level, ''My Car'' (blue) can be moved up, down, right and left.
- Avoiding barriers, use a smoke screen on the pursuing red cars.
- With the help of the radar screen touch the check points, clear and continue on. There are 10 check points per round, one of which is the Special Check Point.
- Check Point points

When cleared	Points
1st	100
2nd	200
3rd	300
4th	400
5th	500
6th	600
7th	700
8th	800
9th	900
10th	1000

- When an accident occurs (hitting a barrier or red car) you must start over from the first 100 points.
- When the Special Check Point is cleared, the points accumulated up to that time are doubled (the screen shows X2). Of course when an accident occurs, this score is wiped out.
- Fuel.....''My Car'' starts off with a full tank (60 L.). When all check points are cleared, an additional 100 pts. is awarded for each 1 liter of fuel remaining. And, when a smoke screen is produced, the fuel decreases by 3 liters. When the fuel remaining reaches the 10 L. level, the fuel indicator turns red and a warning is sounded. When the gas is all used, the car's speed will gradually decrease and come to a stop.
- Challenging Stage - Rounds 3, 7, 11, 15....are ''Challenging'', here 8 red cars appear but cannot run until the fuel in ''My Car'' is used up. Because ''My Car'' runs at full speed, it's fuel is soon gone. Clear all check points before the blocking red cars can move. When this stage ends, starting with the next round the scene changes to city streets.

NO. 935 — RALLY-X UPRIGHT — PHOTOGRAPH

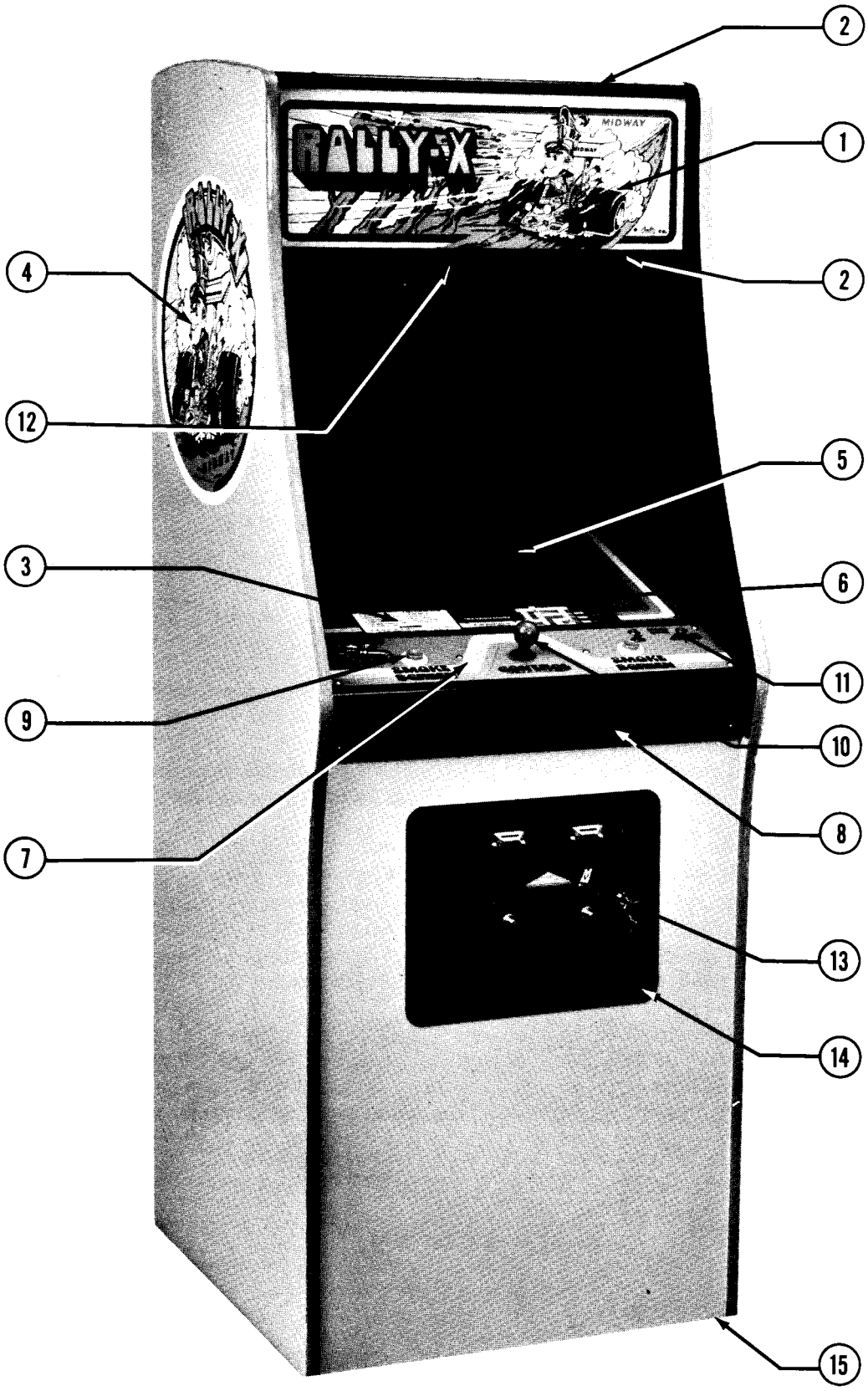

ORDER BY PART NUMBER ONLY

ITEM	PART Nº	DESCRIPTION
1	0935-00902-0000	DECORATIVE PLEXI - UPPER 23" x 9-1/16" x 3/16"
2	0866-00103-00XF	PLEXI RETAINING BRKT. (2 REQ'D.)
	0017-00101-0066	#10 x 5/8 PHIL. HD. SCR. (6 REQ'D.)
3	0935-00901-00XF	MAIN DISPLAY GLASS-TEMPERED 23" x 21-1/8" x 3/16"
4	0935-00905-0000	DECAL - SIDE OF CABINET (2 REQ'D)
5	0017-00003-0339	19" DUAL SYNC COLOR MONITOR - ELECTROHOME
6	A866-00064-0000	T.V. BEZEL & PLEXI ASSY.
7	0935-00900-0000	CONTROL SHELF OVERLAY
8	0935-00100-00XF	CONTROL PLATE
	0017-00101-0118	#8-32 x 1-1/8 CARRIAGE BOLT (6 REQ'D.)
	0017-00104-0022	#8 WASHER (6 REQ'D.)
	0017-00103-0061	#8-32 HEX NUT W/SEMS (6 REQ'D.)
	0017-00101-0065	#6 x 1/2 PHIL. TRS. HD. SCR. (2 REQ'D.)
9	A855-00016-0000	PUSH BUTTON ASSY. (2 REQ'D.)
10	A932-00008-0000	CONTROL ASSY.
11	0017-00032-0051	SMALL RED SWITCH BUTTON W/HARDWARE (2 REQ'D.)
12	0017-00003-0187	6" x 9" SPEAKER, 8 OHM, 9W.
	0017-00009-0393	BLACK SPEAKER GRILL W/4, 1-1/2" SCREWS
13	0151-00055-0100	DOUBLE ENTRY COIN DOOR ASSY.
14	0090-00002-02BK	COIN DOOR FRAME
	0017-00101-0121	#6-32 x 5/16 PHIL. TRS. HD. SCR. (3 REQ'D.) (MOUNTS COIN DOOR TO FRAME)
15	0017-00102-0048	3/8-16 x 2" LEG LEVELERS (4 REQ'D.)
	0017-00103-0026	3/8-16 LEG LEVELER HEX NUTS (4 REQ'D.)
		NOT SHOWN LIST
	A866-00068-0000	DISPLAY LAMP BRKT. ASSY. (BEHIND ITEM #1)
	0017-00003-0135	LAMP SOCKET (2 REQ'D.)
	0017-00003-0309	LAMP 12V., 25W. (2 REQ'D.)
	0017-00101-0626	#8-32 x 3/4 SLT. PAN HD. M.S. (4 REQ'D.)
	0017-00103-0061	#8-32 HEX NUT W/SEMS (4 REQ'D.)
	0017-00101-0025	#8 x 1/2 SLT. HEX HD. BLK. WD. SCR. (4 REQ'D.)
	0017-00009-0033	BASSICK CLAMP (2 REQ'D.)
	0603-00131-0000	STRIKE (2 REQ'D.)
	0017-00101-0028	#8 x 3/4 SLT. HEX. HD SCR. (4 REQ'D. CLAMP, 4 REQ'D. STRIKE)
	0935-00906-0100	KICK PLATE (BASE OF CABINET)
	0935-00907-0000	DECAL - (CABINET FRONT)

NO. 935 — RALLY-X UPRIGHT — INTERIOR ACCESS PICTURE

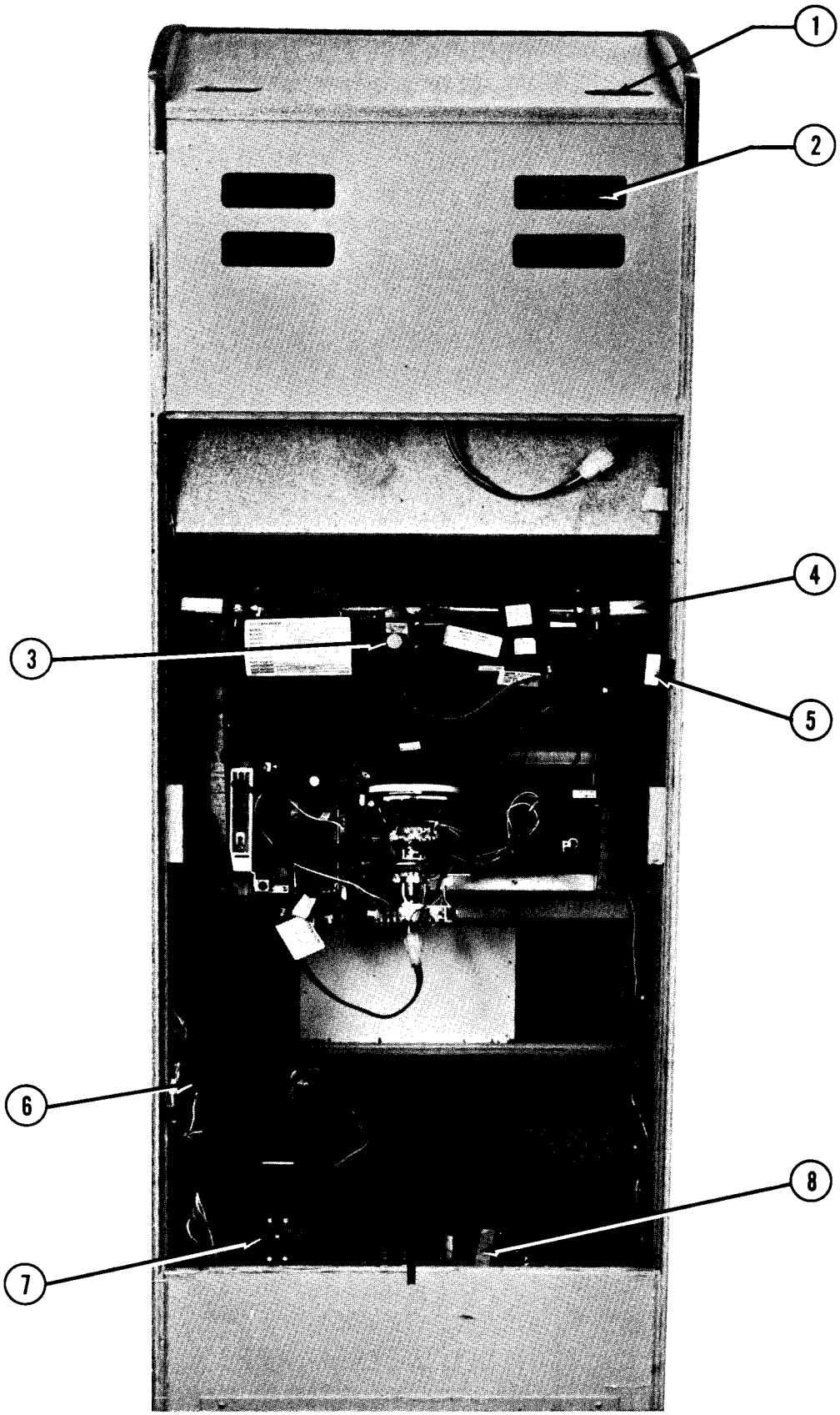

ORDER BY PART NUMBER ONLY

ITEM	PART Nº	DESCRIPTION
1	0586-00036-0000	ON/OFF SWITCH
	0567-00106-0100	SWITCH MTG. BRKT.
	0017-00101-0028	#8 x 3/4 SLT. HEX HD. WD. SCR. (4 REQ'D.)
2	0017-00009-0490	5-5/8" SQ. VENT GRILL (2 REQ'D.)
3	A935-00006-0000	ELECTROHOME - 19" COLOR MONITOR W/CHASSIS, DUAL SYNC HORIZONTAL TUBE (OR)
3	0017-00003-0354	WELLS-GARDNER - 19" COLOR MONITOR W/CHASSIS, DUAL SYNC HORIZONTAL TUBE
4	0935-00101-0000	MONITOR MTG. BRKT. (2 REQ'D.)
	0017-00102-0066	1/4-20 x 1-1/4 UNSLOTTED FIN. HEX HD. BOLT (4 REQ'D.)
	0017-00104-0005	SPLIT WASHER (4 REQ'D.)
5	0017-00032-0071	INTERLOCK SWITCH
	A866-00035-00XF	INTERLOCK SWITCH BRKT. ASSY.
6	A084-90414-C935	POWER SUPPLY ASSEMBLY
	0624-00902-0100	P.C. SUPPORT BRKT. - 12" (2 REQ'D.)
	0624-00902-0200	P.C. SUPPORT BRKT. - 6-1/2" (2 REQ'D.)
	0017-00101-0027	#8 x 3/4 SLT. HEX HD. SCREW (10 REQ'D.)
	0017-00104-0037	#8 FLAT WASHER (10 REQ'D.)
7	A935-00008-0000	CARD RACK ASSEMBLY
8	A935-00007-0000	TRANSFORMER BOARD ASSEMBLY
		ADDITIONAL PARTS LIST
	0017-00009-0477	CASH BOX - MOLDED
	A905-00026-0000	CASH BOX COVER ASSY.
	A624-00001-0000	CASH BOX GUIDE BRKT. ASSY.
	0624-00101-0000	CASH BOX SIDE CHANNEL
	0017-00101-0628	#8-32 x 3/4 CARRIAGE BOLT (4 REQ'D.)
	0017-00104-0022	#8 WASHER (4 REQ'D.)
	0017-00103-0061	#8-32 HEX NUT W/SEMS (4 REQ'D.)
	A151-00029-0000	LOCK ASSY. - BACK DOOR
	0017-00004-0022	304 DYMAX STRAP
	A866-00036-0000	TEST SWITCH & BRKT. ASSY.
	0866-00126-0000	MONITOR BRKT. (4 REQ'D.)

NO. 937 — RALLY-X MINI — PHOTOGRAPH

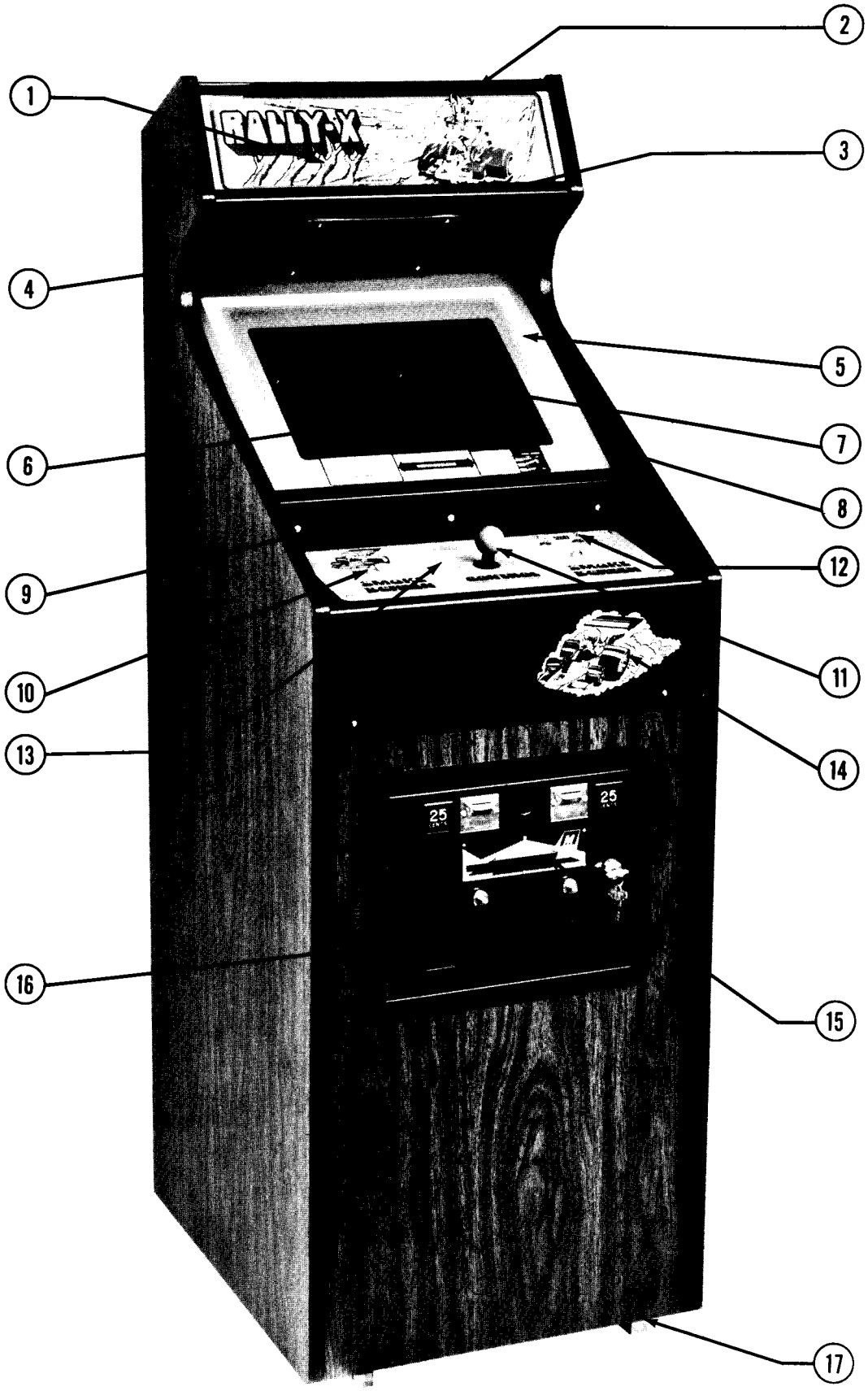

ORDER BY PART NUMBER ONLY

ITEM	PART Nº	DESCRIPTION
1	0937-00901-00XF	UPPER DISPLAY PLEXI - 17-15/16" x 5-3/4" x 3/16"
	A905-00014-0000	INSERT ASSEMBLY
	0017-00003-0219	#194 WEDGE BASE LAMP 14V., 27A (5 REQ'D.)
	0017-00031-0030	LIGHT SOCKET (5 REQ'D.)
2	0905-00115-00XF	TOP BRKT.
3	0905-00116-00XF	BOTTOM BRKT.
	0017-00101-0117	#8 x 5/8 PHIL. TRS. HD. SCR. (3 REQ'D. TOP, 3 REQ'D. BOTTOM)
4	0017-00009-0393	BLACK SPEAKER GRILL W/4 - 1-1/2" SCREWS
	A762-00028-0000	6" x 9" SPEAKER ASSY. W/CABLE, 8 OHM, 7W.
	0017-00101-0642	#8-32 x 1-1/2" CARRIAGE BOLT (4 REQ'D.)
	0017-00103-0061	#8-32 HEX NUT W/SEMS (4 REQ'D.)
	0017-00104-0022	#8 FLAT STL. WASHER (4 REQ'D.)
5	A937-00005-0000	MAIN GLASS ASSY. - 17-13/16" x 13-1/8" x 3/16"
6	0017-00003-0340	13" COLOR MONITOR DUAL SYNC HORIZONTAL MTG. - ELECTROHOME
7	A937-00006-0000	T.V. BEZEL ASSY.
8	0905-00903-0100	GLASS CHANNEL - 14-1/2" LG. (2 REQ'D.)
9	0905-00102-00XF	GLASS CLAMPING PLATE
	0017-00101-0639	#8-32 x 1-1/4 CARRIAGE BOLT (3 REQ'D.)
	0017-00104-0037	#8 WASHER (3 REQ'D.)
	0017-00103-0009	#8-32 WING NUT (3 REQ'D.)
10	A855-00016-0000	PUSH BUTTON ASSY. (2 REQ'D.)
11	A932-00008-0000	CONTROL ASSEMBLY
12	0017-00032-0051	SMALL RED SWITCH BUTTON W/HARDWARE (2 REQ'D.)
13	0937-00902-0000	DECORATIVE CONTROL SHELF OVERLAY
14	0937-00100-00XF	CONTROL PLATE
	0017-00101-0118	#8-32 x 1-1/8 CARRIAGE BOLT (6 REQ'D.)
	0017-00104-0022	#8 WASHER (6 REQ'D.)
	0017-00103-0061	#8-32 HEX NUT W/SEMS (6 REQ'D.)
	0017-00101-0065	#6 x 1/2 PHIL. TRS. HD. SCR. (2 REQ'D.)
15	0151-00055-0100	DOUBLE ENTRY COIN DOOR ASSY.
16	0090-00002-02BK	COIN DOOR FRAME
	0017-00101-0121	#6-32 x 5/16 PHIL. TRS. HD. SCR. (3 REQ'D.) (MOUNTS COIN DOOR TO FRAME)
17	0017-00102-0048	3/8-16 x 2" LEG LEVELERS (4 REQ'D.)
	0017-00103-0026	3/8-16 LEG LEVELER HEX NUTS (4 REQ'D.)

NO. 937 — RALLY-X MINI — INTERIOR ACCESS PICTURE

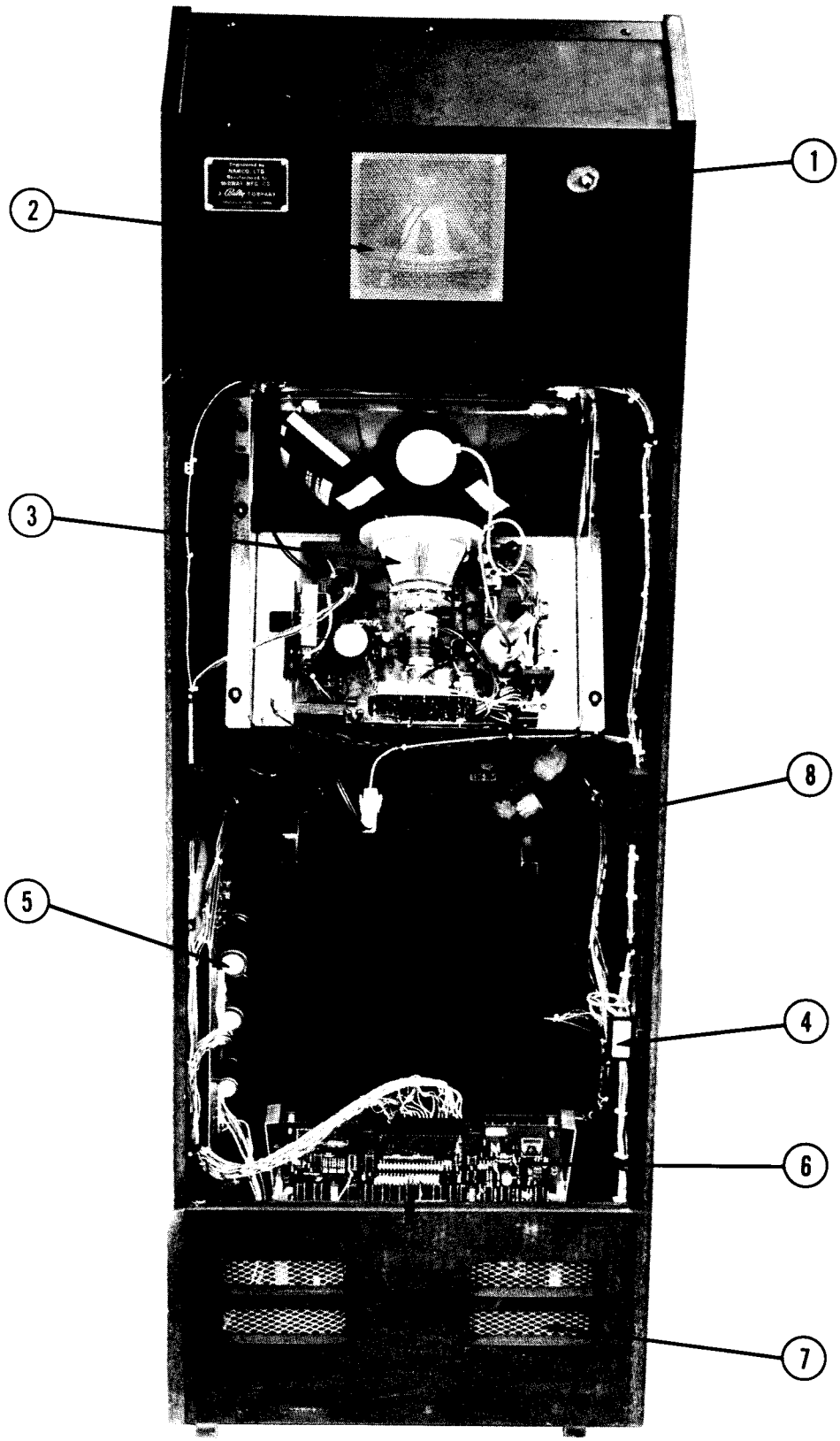

NO. 937 — RALLY-X MINI — INTERIOR ACCESS PICTURE

ORDER BY PART NUMBER ONLY

ITEM	PART Nº	DESCRIPTION
1	0017-00032-0083	ON/OFF SWITCH
	0567-00106-0100	ON/OFF SWITCH PLATE
2	A762-00028-0000	6" x 9" SPEAKER ASSY. W/CABLE, 8 OHM, 7W.
	0618-00117-00XF	VENT GRILL
	0017-00101-0015	#6 x 1/2 SLT. HEX HD. SCR. (4 REQ'D.)
3	0017-00003-0340	13" COLOR DUAL SYNC HORIZONTAL MONITOR & CHASSIS - ELECTROHOME
	0017-00102-0013	1/4-20 x 1-1/4 CARRIAGE BOLT (4 REQ'D.)
	0017-00104-0014	PERIPHERY WASHER (4 REQ'D.)
	0017-00103-0018	1/4-20 HEX NUT (4 REQ'D.)
4	0017-00032-0071	INTERLOCK SWITCH
	A866-00035-00XF	INTERLOCK SW. BRKT. ASSY.
5	A084-90414-C935	POWER SUPPLY ASSEMBLY
	0624-00902-0100	P.C. SUPPORT BRKT. - 12" (2 REQ'D.)
	0624-00902-0200	P.C. SUPPORT BRKT. - 6-1/2 (2 REQ'D.)
	0017-00101-0027	#8 x 3/4 SLT. HEX HD. SCREW (10 REQ'D.)
	0017-00104-0037	#8 FLAT WASHER (10 REQ'D.)
6	A935-00008-0000	CARD RACK ASSY.
	A935-00011-0000	TRANSFORMER BOARD ASSY. - NOT SHOWN LOCATED BEHIND CARD RACK ASSY.
7	0017-00009-0490	5-5/8" SQ. VENT GRILL (2 REQ'D.)
8	A905-00028-0000	CASH BOX ASSY. W/HANDLE
	A905-00026-0000	CASH BOX COVER ASSY.
	A624-00001-0000	CASH BOX GUIDE BRKT. ASSY.
	0624-00101-0000	CASH BOX GUIDE BRKT.
	0017-00101-0628	#8-32 x 3/4 CARRIAGE BOLT (4 REQ'D.)
	0017-00104-0022	#8 WASHER (4 REQ'D.)
	0017-00103-0061	#8-32 LOCK NUT W/SEMS (4 REQ'D.)
		ADDITIONAL PARTS
	A151-00029-0000	LOCK ASSY. - BACK DOOR
	0017-00004-0022	304 DYMAX STRAP
	0017-00009-0033	LATCH CLAMP (2 REQ'D.)
	0603-00131-00XF	STRIKE
	0017-00101-0028	#8 x 3/4 SLT. HEX HD. SCR. (4 REQ'D. CLAMP, 4 REQ'D. STRIKE)
	0597-00124-00B0	BACK DOOR CUP
	0017-00101-0129	#10-32 x 1" CARRIAGE BOLT (3 REQ'D.)
	0017-00103-0081	#10-32 HEX NUT W/SEMS (3 REQ'D.)
	A866-00036-0000	TEST SWITCH & BRKT. ASSY.

NO. 936 — RALLY-X COCKTAIL — PHOTOGRAPH

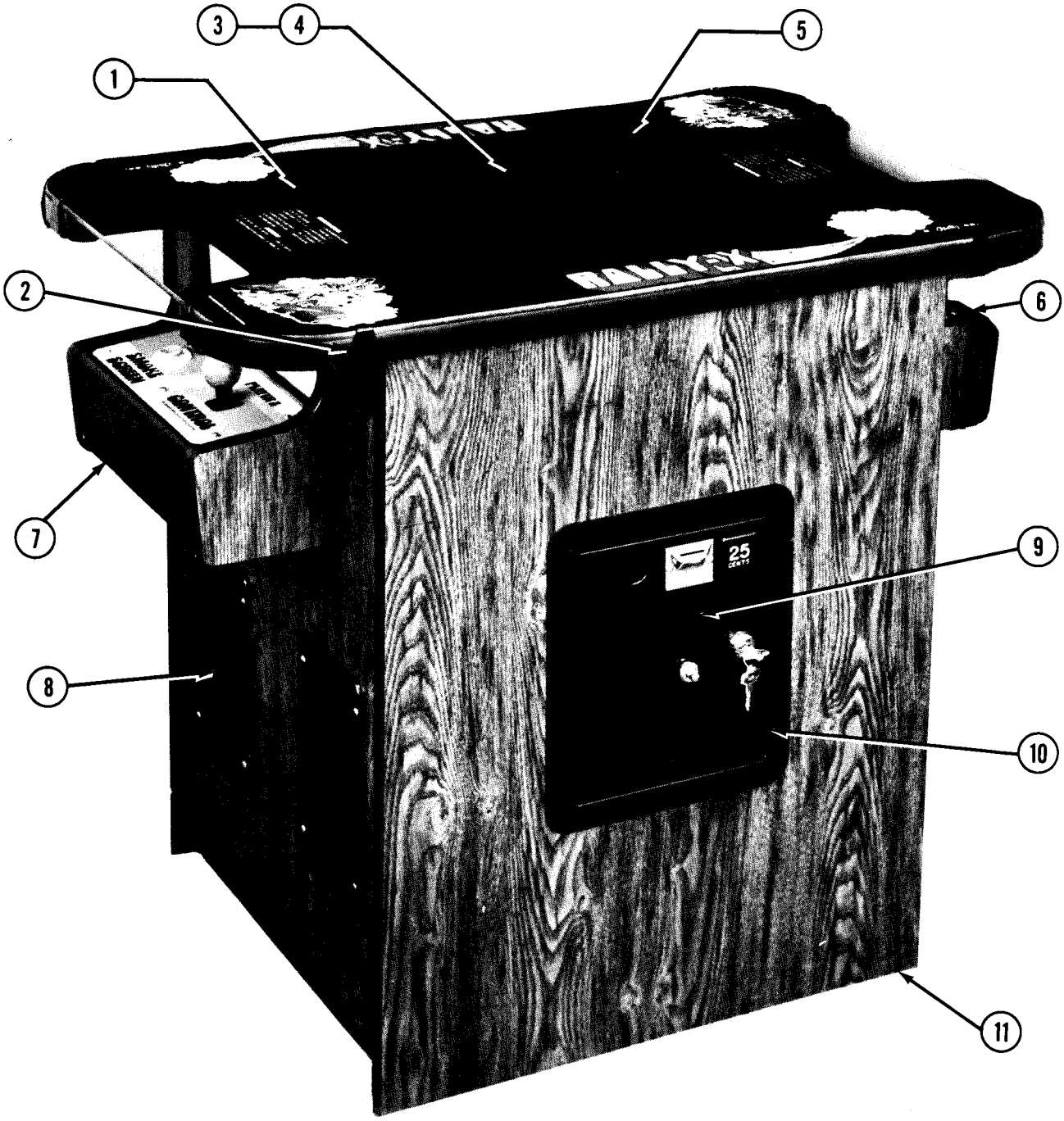

NO. 936 — RALLY-X COCKTAIL — PHOTOGRAPH

ORDER BY PART NUMBER ONLY

ITEM	PART Nº	DESCRIPTION
1	0936-00902-0000	COVER GLASS - 32'' x 22'' x 1/4''
2	0775-00104-00XF	GLASS CLIPS (8 REQ'D.)
	0017-00101-0117	#8 x 5/8 PHIL. TRS. HD. SCR. (16 REQ'D.)
3	0017-00003-0334	19'' DUAL SYNC COLOR MONITOR - ELECTROHOME
4	0936-00903-0000	PLEXI - GLASS
5	0921-00901-0000	T.V. BEZEL
6	A936-00004-0000	CONTROL SHELF ASSY. - PLAYER #1
7	A936-00005-0000	CONTROL SHELF ASSY. - PLAYER #2
8	0017-00009-0393	BLACK SPEAKER GRILL (4 REQ'D.)
	0017-00101-0639	#8-32 x 1-1/2 CARRIAGE BOLT (16 REQ'D.)
	0017-00103-0061	#8-32 HEX NUT W/SEMS (16 REQ'D.)
9	0151-00055-0200	SINGLE ENTRY COIN DOOR ASSY.
10	0090-00002-01BK	COIN DOOR FRAME
	0017-00101-0121	#6-32 x 5/16 PHIL. TRS. HD. SCR. (3 REQ'D.)
11	0017-00102-0048	3/8-16 x 2'' LEG LEVELERS (4 REQ'D.)
	0017-00103-0026	3/8-16 LEG LEVELER HEX NUTS (4 REQ'D.)
	G927-00005-0000	COCKTAIL TABLE - HIGH BASE - LEG KIT INCLUDING WHIZ BOLTS, WASHERS & LEGS (4 REQ'D.) (OPTIONAL)
		NOT SHOWN LIST
	0610-00132-0000	STRIKE (2 REQ'D.)
	0017-00101-0028	#8 x 3/4 HEX HD. S.M.S. (4 REQ'D.)
	0017-00009-0033	BASSICK CLAMP (4 REQ'D.)
	0017-00101-0026	#8 x 5/8 HEX HD. S.M.S. (4 REQ'D.)
	A749-00003-0000	COIN BOX ASSY.
	A627-00056-0000	COIN BOX COVER ASSY.
	A625-00024-0000	COIN BOX GUIDE BRKT. ASSY.
	0625-00117-0000	COIN BOX SIDE CHANNEL
	0017-00101-0628	#8-32 x 3/4 CARRIAGE BOLT (4 REQ'D.)
	0017-00103-0008	#8-32 HEX NUT (4 REQ'D.)
	0017-00004-0022	304 DYMAX STRAP
	A749-00005-0000	INTERLOCK SWITCH ASSY.
	A866-00036-0000	TEST SW. & BRKT. ASSY.

NO. 936 — RALLY-X COCKTAIL — INTERIOR ACCESS PICTURE

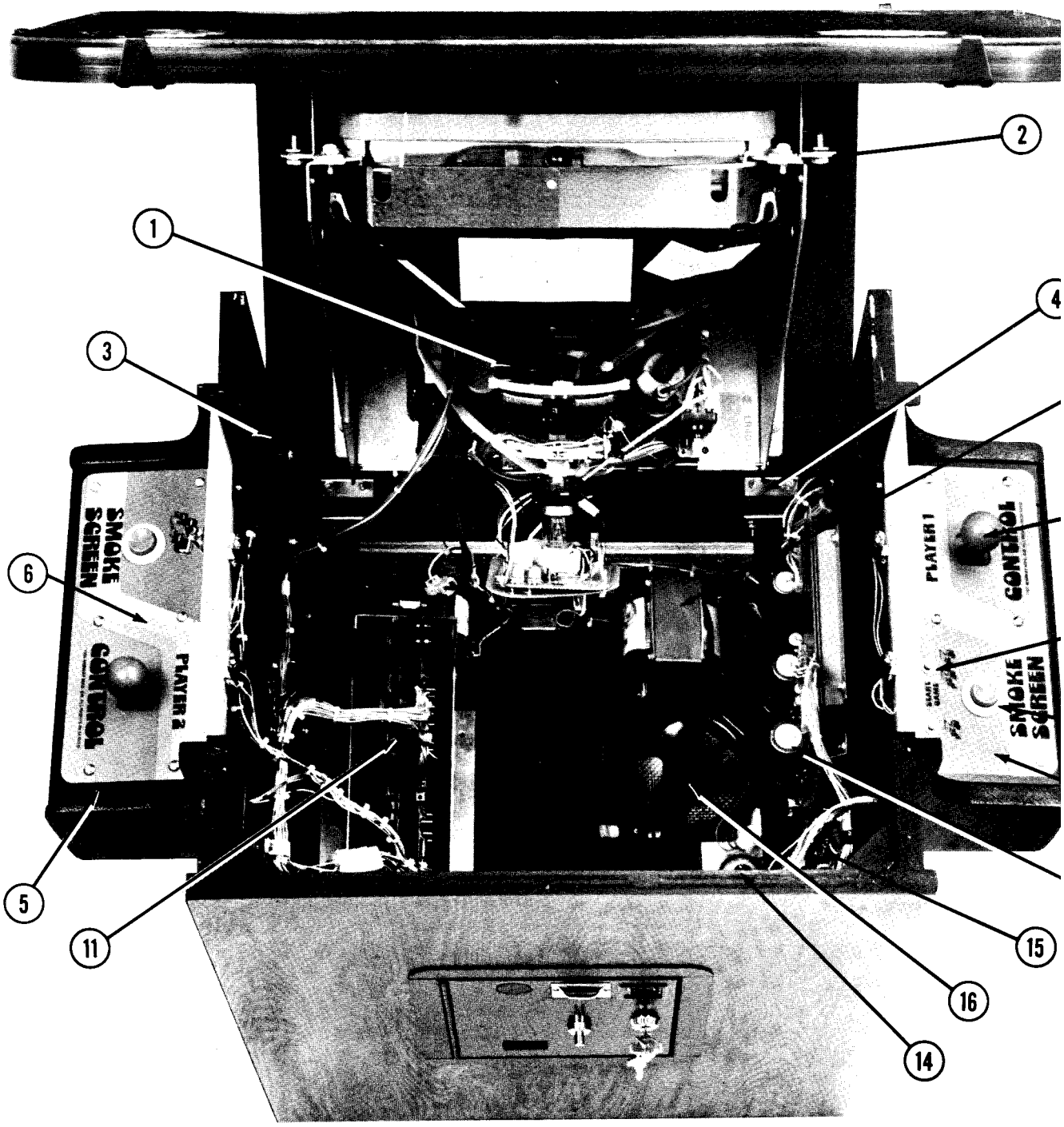

ORDER BY PART NUMBER ONLY

ITEM	PART Nº	DESCRIPTION
1	0017-00003-0334	19" DUAL SYNC VERTICAL COLOR MONITOR & CHASSIS - ELECTROHOME
2	A921-00010-00XF	MONITOR MTG. BRKT. ASSY. (2 REQ'D.)
	0017-00101-0642	#8-32 x 1-1/2 CARRIAGE BOLT (4 REQ'D.)
	0017-00104-0031	#8 FLAT WASHER (4 REQ'D.)
	0017-00103-0061	#8-32 HEX NUT W/SEMS (4 REQ'D.)
3	A889-00017-0000	LATCH SLIDE ASSY. (TABLE TOP PROP)
4	0017-00009-0495	2" HINGE (2 REQ'D.)
	0017-00101-0639	#8-32 x 1-1/4 CARRIAGE BOLT (8 REQ'D.)
	0017-00103-0061	#8-32 HEX NUT W/SEMS (8 REQ'D.)
5	0927-00100-00XF	CONTROL PANEL (2 REQ'D.)
6	0936-00900-0000	DECORATIVE OVERLAY - PLAYER #2
7	0936-00901-0000	DECORATIVE OVERLAY - PLAYER #1
	0017-00101-0620	#8-32 x 1/2 CARRIAGE BOLT (4 REQ'D. EACH FOR PLAYER #1 & #2)
	0017-00104-0022	#8 FLAT WASHER (4 REQ'D. EACH FOR PLAYER #1 & #2)
	0017-00103-0061	#8-32 HEX NUT W/SEMS (4 REQ'D. EACH FOR PLAYER #1 & #2)
	0017-00101-0341	#6 x 1/4 PHIL. TRS. HD. SCR. (2 REQ'D. EACH FOR PLAYER #1 & #2)
8	A932-00008-0000	CONTROL ASSY. (2 REQ'D.)
9	0017-00032-0051	SMALL RED SWITCH BUTTON (2 REQ'D.) - (PLAYER #1 SIDE ONLY)
10	A855-00016-0000	PUSH BUTTON ASSY. (2 REQ'D.)
11	A935-00008-0000	CARD RACK ASSY.
12	A936-00011-0000	TRANSFORMER BOARD ASSY.
13	A084-90414-C935	POWER SUPPLY ASSY.
	0624-00902-0100	P.C. SUPPORT BRKT. - 12" (3 REQ'D.)
	0017-00101-0017	#6 x 1/2 SLT. HEX HD. SCR. (9 REQ'D.)
	0017-00104-0031	STL. WASHER (9 REQ'D.)
14	0017-00032-0083	ON/OFF SWITCH 120V, 6A.
	0567-00106-0100	ON/OFF SWITCH MTG. PLATE
15	0017-00003-0187	6" x 9" SPEAKER 8 OHM, 9W.
16	A775-00013-0000	FAN ASSY. (NEXT 7 PART NO'S)
	0017-00003-0222	FAN
	0775-00110-00XF	FAN PLATE
	0870-00100-00XF	VENT SCREEN
	0017-00101-0347	#6-32 x 1/2 PHIL. R.H.M.S. SEMS (4 REQ'D.)
	0017-00104-0009	#6 EXT. WASHER (4 REQ'D.)
	0017-00103-0005	#6-32 HEX NUT (4 REQ'D.)
	0017-00101-0026	#8 x 5/8 SLOT. HEX HD. S.M.S. (4 REQ'D.)

NO. 936 — RALLY-X COCKTAIL — CONTROL SHELF ASSEMBLY

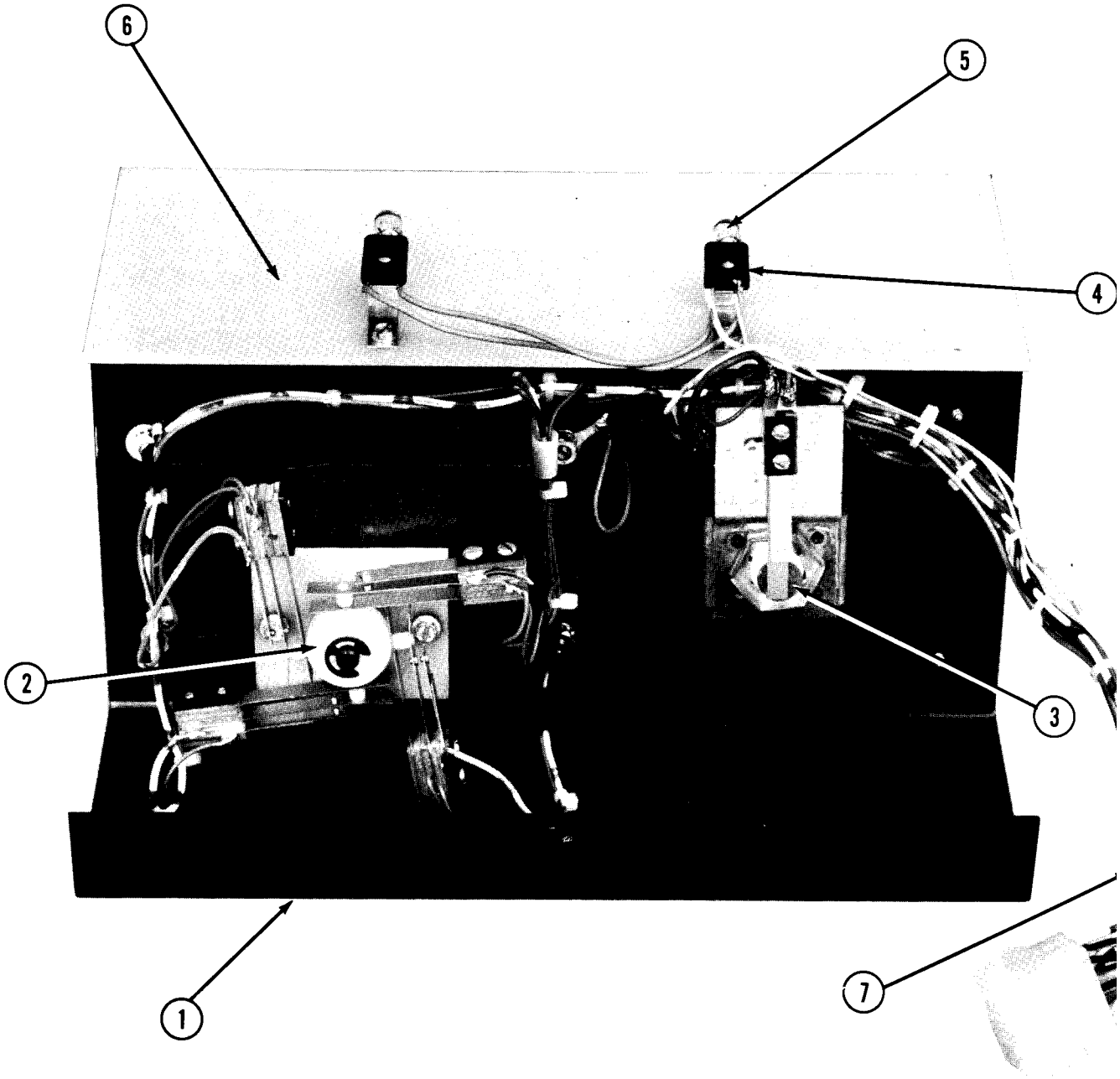

NO. 936 — RALLY-X COCKTAIL — CONTROL SHELF ASSEMBLY

ORDER BY PART NUMBER ONLY

ITEM	PART Nº	DESCRIPTION
1	0927-00100-00XF	CONTROL PANEL
2	A932-00008-0000	CONTROL ASSEMBLY - SEE SEPERATE DETAIL
3	A855-00016-0000	PUSH BUTTON ASSY. -SEE SEPERATE DETAIL
4	0017-00031-0044	WEDGE BASE LAMP SOCKET (2 REQ'D. PER CONTROL)
	0017-00101-0555	#6-32 x 5/16 SLT. HEX HD. SCR. (2 REQ'D. PER CONTROL)
5	0017-00003-0219	#194 WEDGE LAMP 14V., .27A. (2 REQ'D. PER CONTROL)
6	0921-00903-0000	LIGHT SHIELD
7	A936-00006-0000	CONTROL SHELF CABLE ASSY. - PLAYER #1
	A936-00007-0000	CONTROL SHELF CABLE ASSY. - PLAYER #2

RALLY-X — CARD RACK ASSEMBLY

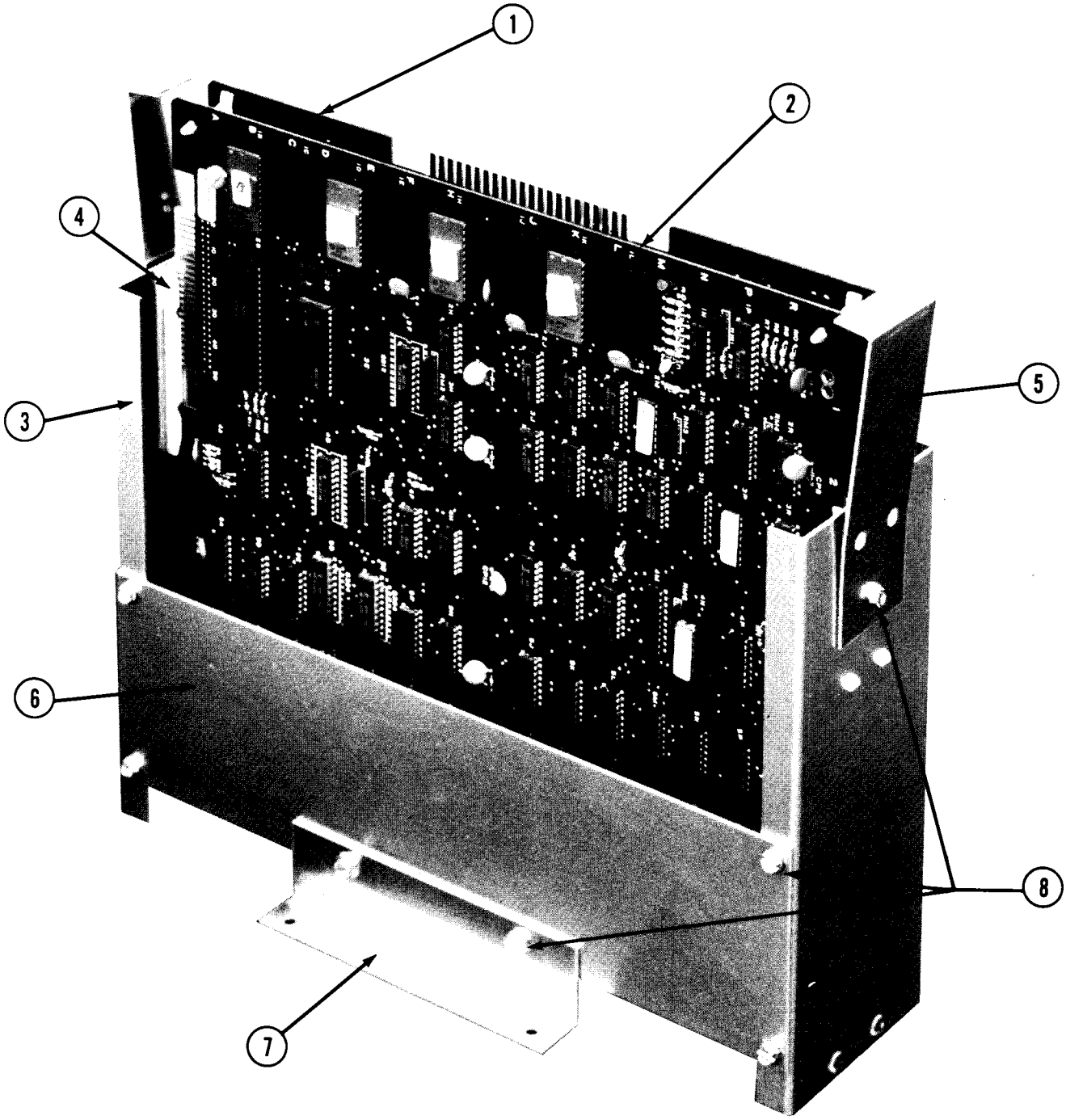

RALLY-X — CARD RACK ASSEMBLY

ORDER BY PART NUMBER ONLY

ITEM	PART Nº	DESCRIPTION
1	A082-91385-C000	GAME LOGIC BOARD ASSY. - BOARD #1
2	A082-91387-C000	GAME LOGIC BOARD ASSY. - BOARD #2
3	A935-00015-0000	HOLDER PLATE & STOP ASSY. (2 REQ'D.)
4	0017-00009-0478	NYLON GUIDE (4 REQ'D.)
5	0935-00105-0000	RETAINER (2 REQ'D.)
6	0935-00103-0000	SIDE SUPPORT (2 REQ'D.)
7	0935-00102-0000	MOUNTING BRACKET (2 REQ'D.)
8	0017-00101-0096	#6 x 3/8 SLT. HEX HD. SCR. (14 REQ'D.)

RALLY-X — CONTROL ASSEMBLY

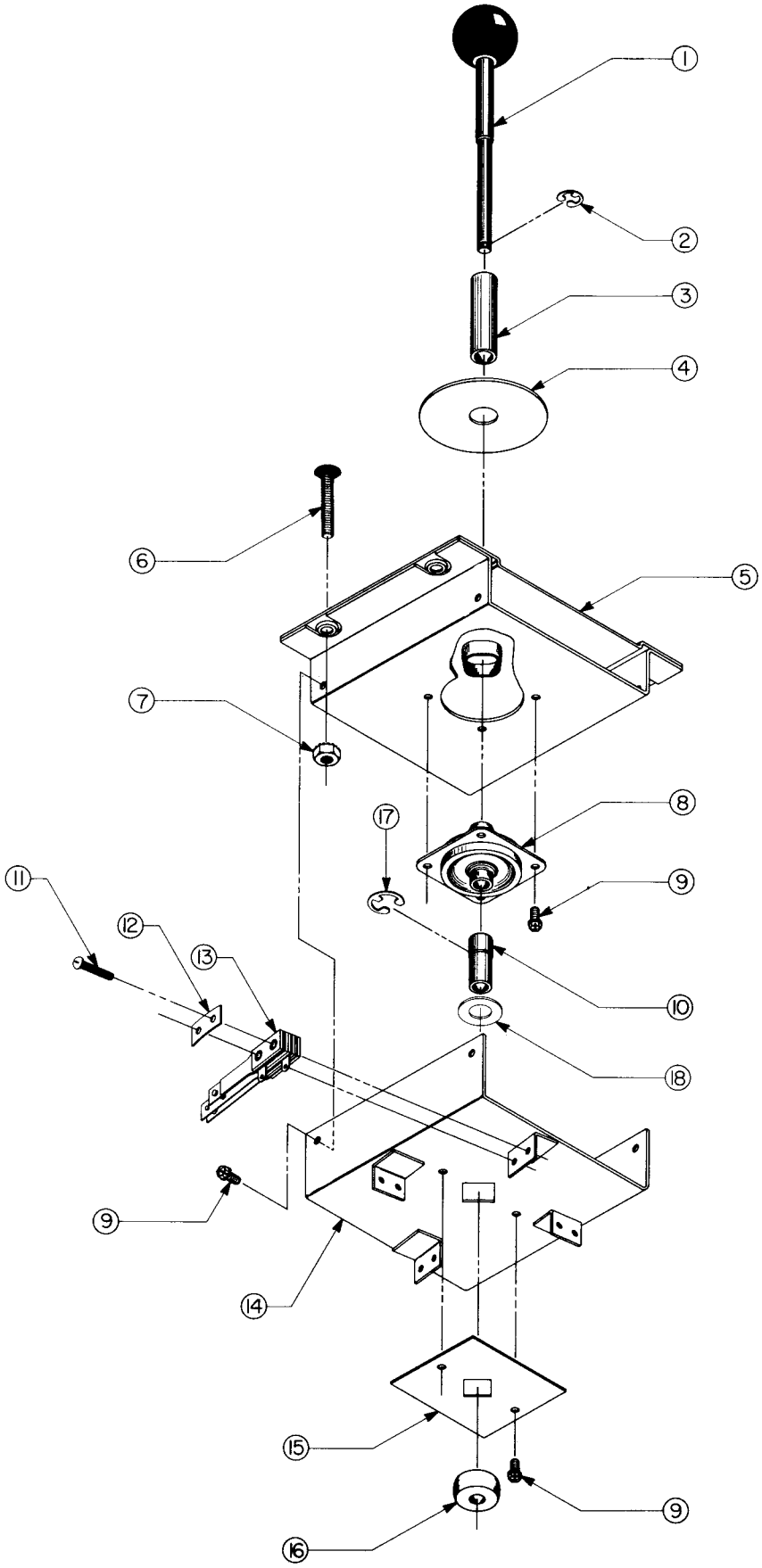

RALLY-X — CONTROL ASSEMBLY

ORDER BY PART NUMBER ONLY

ITEM	PART Nº	DESCRIPTION
1	A932-00022-0000	SHAFT & BALL ASSY.
2	0017-00100-0025	1/4" E-RING
3	0921-00702-0000	STOP SPACER
4	0921-00902-0000	SLIDE PLATE
5	A932-00011-00XF	SPOT WELD ASSY.
6	0017-00101-0713	#8-32 x 1" SLT. FLAT HD. SCREW (4 REQ'D.)
7	0017-00103-0061	#8-32 HEX NUT W/SEMS (4 REQ'D.)
8	0932-00902-0000	GROMMET
9	0017-00101-0598	#8-32 x 5/16 SLT. HEX HD. M.S. (10 REQ'D.)
10	0921-00701-0000	SLEEVE
11	0017-00101-0528	#5-40 x 3/4 SLT. RND. HD. SCR. (8 REQ'D.)
12	0020-00202-0000	SWITCH PLATE (4 REQ'D.)
13	A932-00009-0000	SWITCH ASSEMBLY (4 REQ'D.)
14	A932-00012-00XF	STOP PLATE & SWITCH BRKT. ASSY.
15	0932-00904-0000	WEAR PLATE
16	0921-00700-0000	ACTUATOR
17	0017-00100-0115	7/16" E-RING
18	0017-00104-0111	NYLON FLAT WASHER

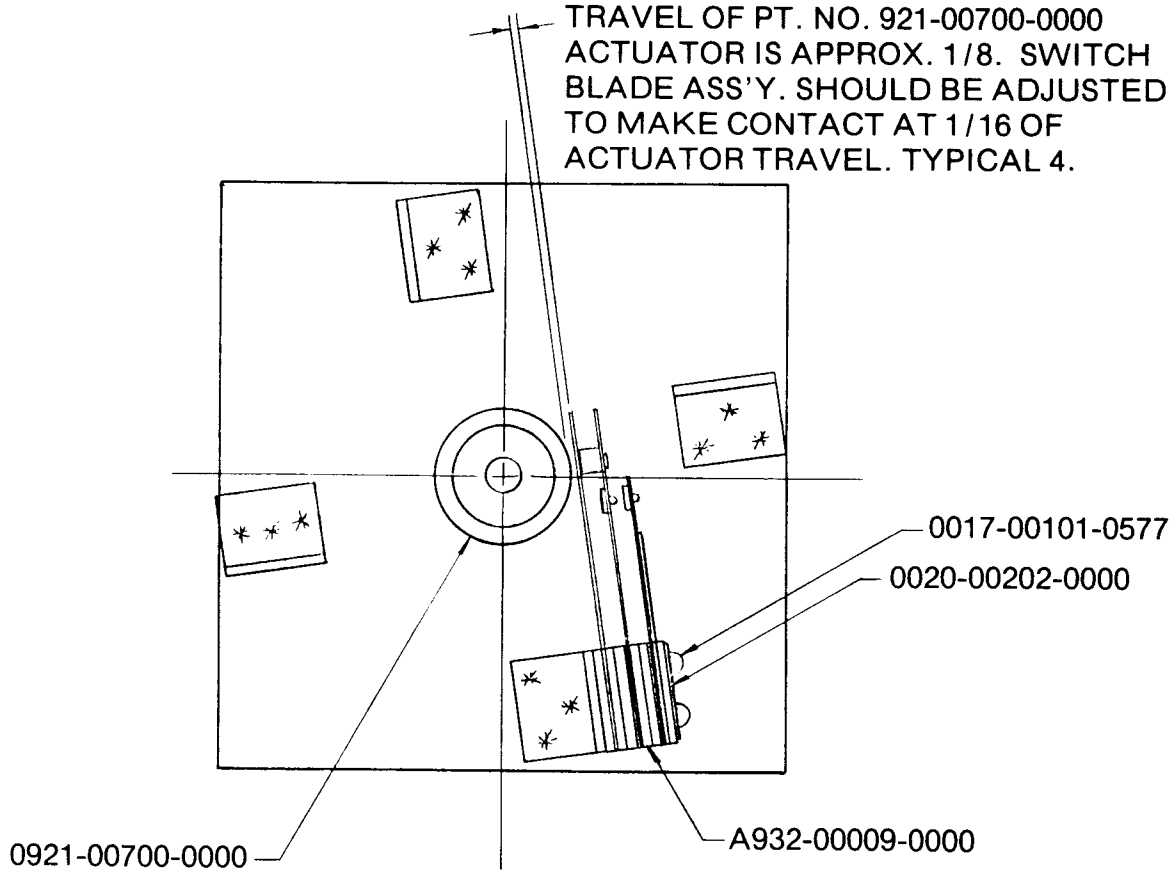

RALLY-X — PUSH BUTTON ASSEMBLY

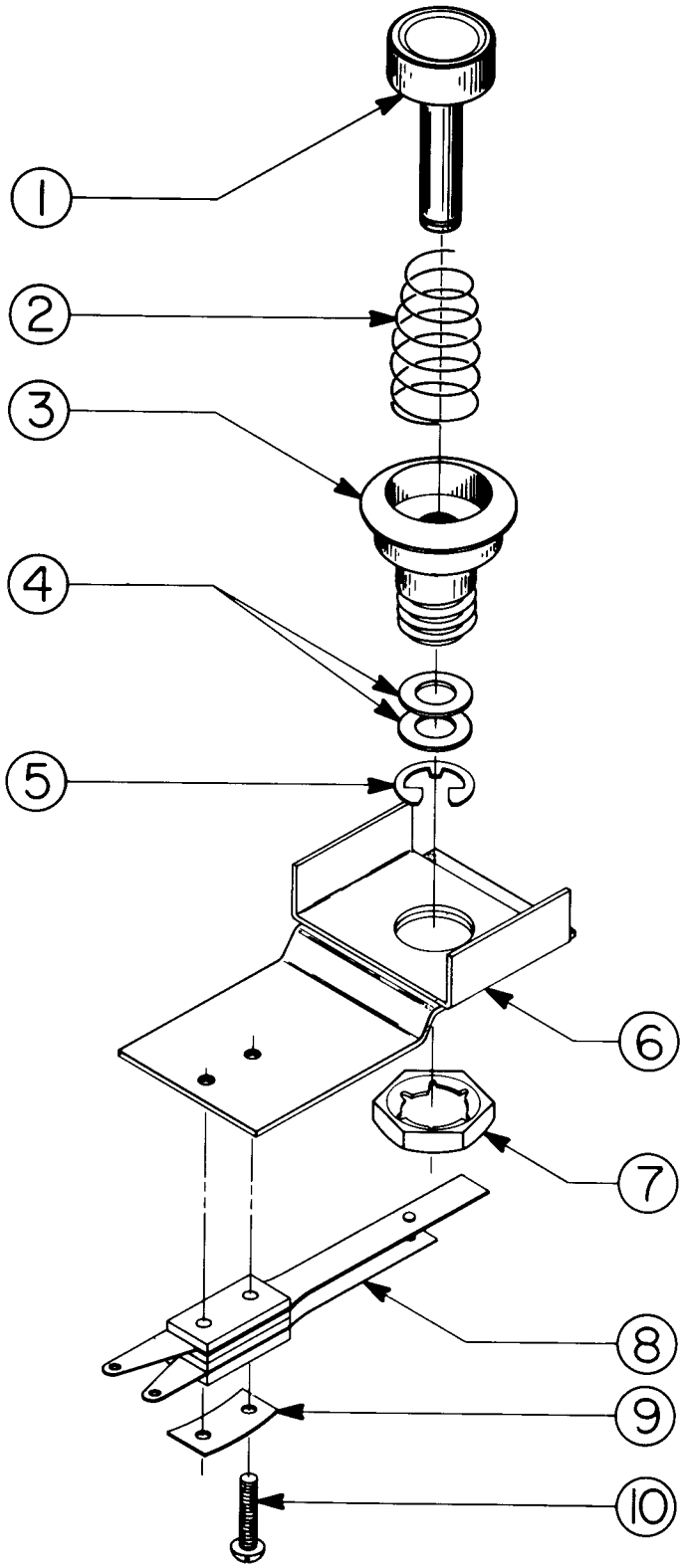

RALLY-X — PUSH BUTTON ASSEMBLY

ORDER BY PART NUMBER ONLY

ITEM	PART Nº	DESCRIPTION
1	0017-00009-B384	BUTTON - RED
2	0010-00242-0000	SPRING
3	0017-00009-0376	BUTTON HOUSING
4	0017-00104-0028	FLAT WASHER (2 REQ'D.)
5	0017-00100-0025	1/4" E-RING
	A855-00016-0000	PUSH BUTTON ASSY. (FIRST 5 ITEMS)
6	A927-00011-0000	MOUNTING BRKT. ASSY. - (COCKTAIL)
6	0586-00107-0000	MOUNTING BRKT. - (UPRIGHT & MINI ONLY)
7	0017-00103-0054	PAL NUT
8	A739-00016-0000	SWITCH ASSEMBLY
9	0020-00202-0000	SWITCH PLATE
10	0017-00101-0526	#5-40 x 9/16 PHIL. HD. M.S. (2 REQ'D.)

RALLY-X — TRANSFORMER BOARD ASSEMBLY

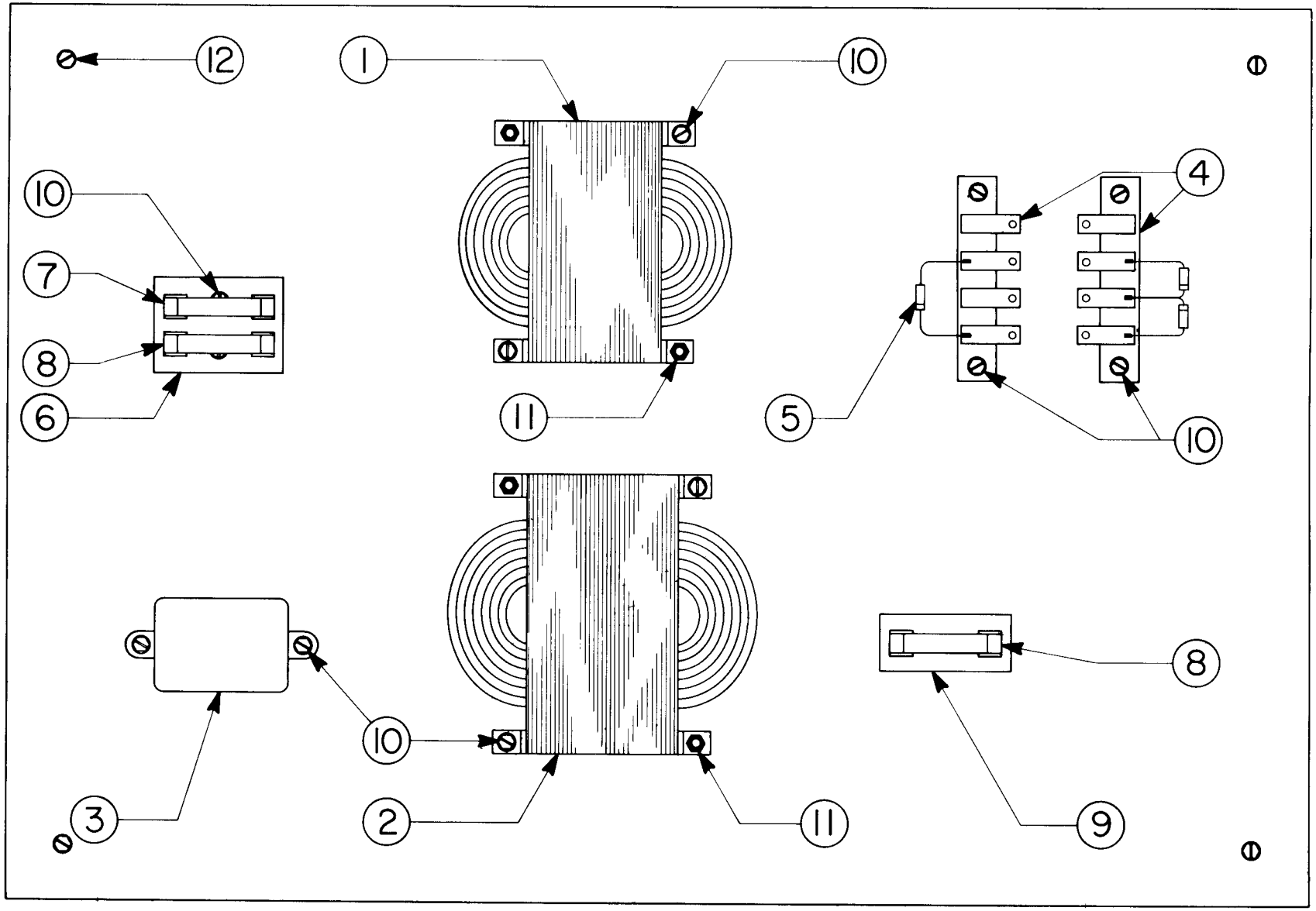

RALLY-X — TRANSFORMER BOARD ASSEMBLY

ORDER BY PART NUMBER ONLY

ITEM	PART Nº	DESCRIPTION
1	MT00-00082-0000	TRANSFORMER 115 VOLT
2	MT00-00087-0000	TRANSFORMER 240 VOLT
3	0017-00003-0114	NOISE FILTER
4	A031-00002-0000	TERMINAL STRIP ASSY. (2 REQ'D.)
5	0064-030XX-XXPX	DIODE IN4004 400V. (3 REQ'D.)
6	0720-00001-0200	2 POSITION FUSE CLIP
8	0017-00003-0103	FUSE 1A., 250V. SLO-BLO
8	0017-00003-0004	FUSE 2A., 250V. SLO-BLO (2 REQ'D.)
9	0720-00001-0100	1 POSITION FUSE CLIP
10	0017-00101-0015	#6 x 1-1/2 SLT. HEX HD. SCR. (16 REQ'D.)
11	0017-00101-0637	#8-32 x 1-1/4 CARRIAGE BOLT (4 REQ'D.)
	0017-00103-0008	#8-32 HEX NUT (4 REQ'D.)
12	0017-00101-0018	#6 x 3/4 SLT. HEX HD. SCR. (4 REQ'D.)
	A866-00049-0000	LINE CORD ASSY. - NOT SHOWN
	3000-04271-0000	GROUND STRAP - NOT SHOWN

NO. 935 & 937 — RALLY-X UPRIGHT & MINI — FRONT DOOR ASSEMBLY

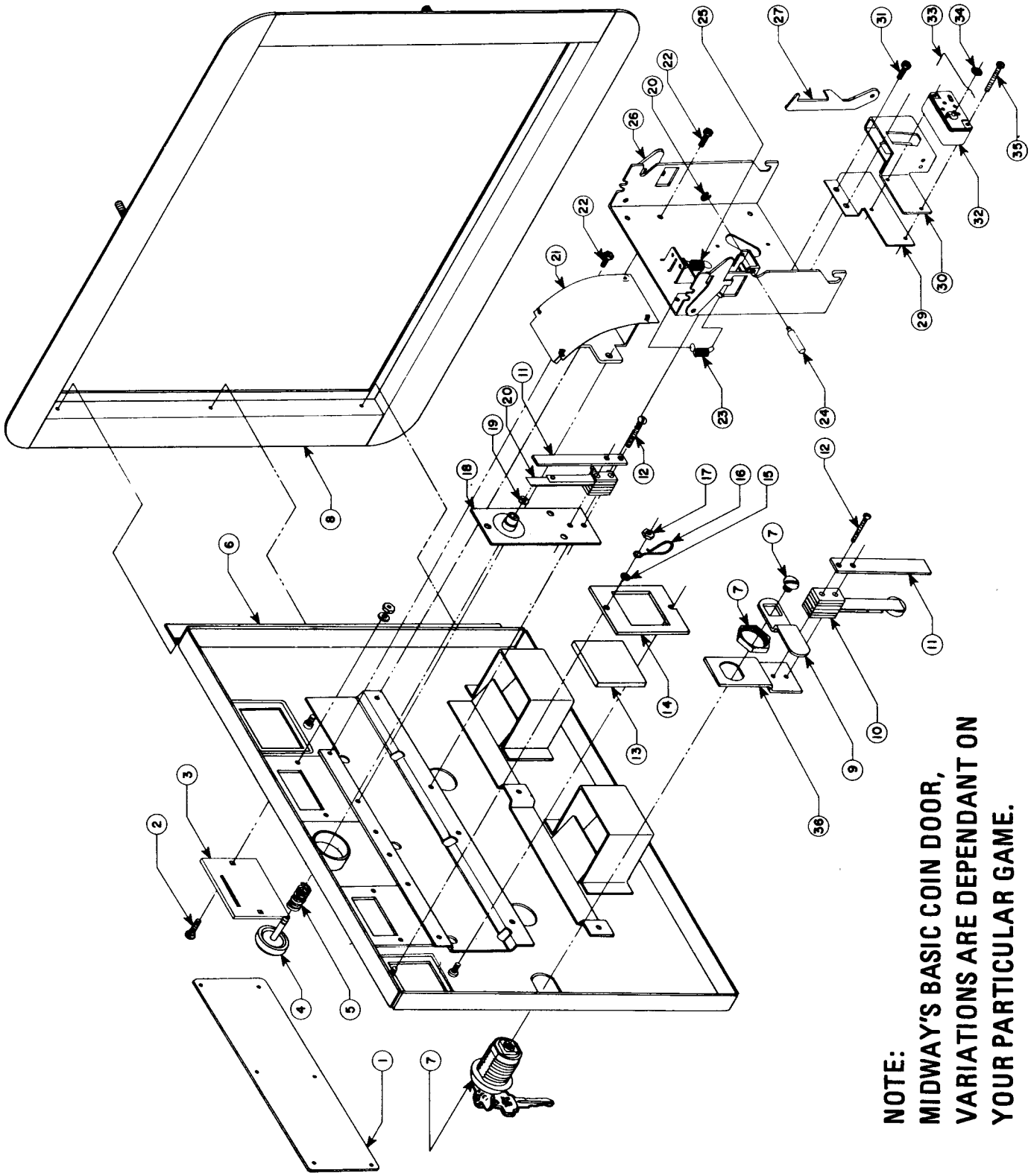

NOTE:
MIDWAY'S BASIC COIN DOOR,
VARIATIONS ARE DEPENDANT ON
YOUR PARTICULAR GAME.

NO. 935 & 937 — RALLY-X UPRIGHT & MINI — FRONT DOOR ASSEMBLY

ORDER BY PART NUMBER ONLY

ITEM	PART Nº	DESCRIPTION
1	0090-00902-0000	DRESS PLATE
	0090-00902-0100	DRESS PLATE W/O BUTTON TO START GAME
2	0017-00101-0552	#6-32 x 1/4 CARRIAGE BOLT (2)
3	0090-00117-03XF	COIN ENTRY PLATE (25¢)
4	0090-00906-0000	PLASTIC START BUTTON
5	0010-00007-0000	COMPRESSION SPRING
6	A090-00020-2003	DOOR ASSY. DOUBLE ENTRY
7	0017-00005-0050	DOOR LOCK & KEY WITH SCREW & NUT
8	0090-00002-02BK	DOUBLE DOOR FRAME
9	0017-00005-0041	421 N.S. CAM
10	0090-00901-0000	DOOR SWITCH
	0090-00126-01XF	SWITCH BACKUP PLATE
12	0017-00101-0528	#5-40 x 3/4" LNG. M.S.
13	0090-00903-9500	25¢ WINDOW
14	0090-00143-0000	COIN PLEX RETAINER
15	0017-00104-0002	SPLIT LOCK WASHER
16	0017-00007-0019	KEY HOOK
17	0017-00103-0005	#6-32 HEX NUT
18	0090-00010-0000	SW. PLATE & OILLITE ASSY.
19	0017-00100-0018	"E" RING
20	0090-00131-0000	SWITCH
21	0090-00104-0000	TOP & BTM. COIN CHUTE W/BRKT. ASSY.
22	0017-00101-0598	#8 x 5/16 SCREW
23	0010-00181-0100	SPRING
24	0090-00129-00XF	PIVOT POST
25	0010-00134-0000	SPRING
26	0090-00008-0000	ACCEPTOR FRAME ASSY.
27	0093-00155-00XF	REJECTOR LEVER
28	0017-00100-0012	"E" RING
29	0090-00162-00XF	COIN SWITCH MTG. BRKT. - SMALL (AMERICAN)
29	0090-00163-00XF	COIN SWITCH MTG. BRKT. - LARGE
30	0017-00005-0203	COIN SWITCH CHUTE - SMALL (AMERICAN)
30	0017-00005-0204	COIN SWITCH CHUTE - LARGE
31	0017-00101-0555	#6-32 x 5/16 SCREW
32	0017-00005-0195	COIN SWITCH
33	0010-00599-0000	COIN SWITCH WIRE
34	0017-00007-0132	PUSH-ON RING (BLK.)
35	0017-00101-0698	#4-40 x 3/4 SCREW (2 REQ'D.)
36	0090-00128-00XF	SWITCH BRKT. - DOOR TILT
	A090-00061-0000	ANTI-STRING DEVICE ASSY. (REPLACES ITEM 30)
	A090-00064-0000	ANTI-PENNY DEVICE ASSY.

NO. 936 — RALLY-X COCKTAIL — FRONT DOOR ASSEMBLY

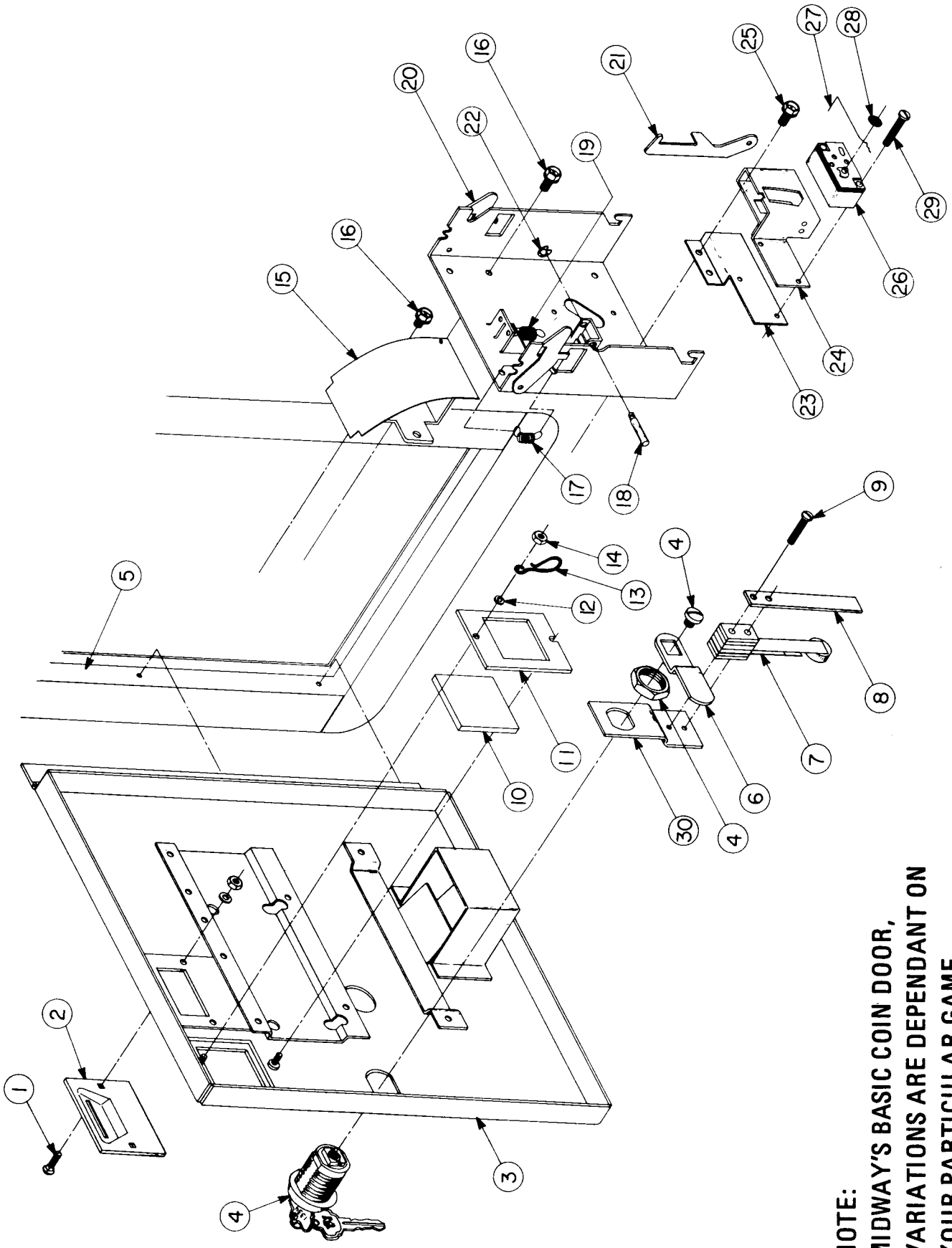

NOTE:
MIDWAY'S BASIC COIN DOOR,
VARIATIONS ARE DEPENDANT ON
YOUR PARTICULAR GAME.

NO. 936 — RALLY-X COCKTAIL — FRONT DOOR ASSEMBLY

ORDER BY PART NUMBER ONLY

ITEM	PART Nº	DESCRIPTION
1	0017-00101-0552	#6-32 x 1/4 CARRIAGE BOLT (2 REQ'D.)
2	0090-00117-03XF	COIN ENTRY PLATE (25¢)
3	A090-00058-0000	DOOR ASSY. SINGLE ENTRY
4	0017-00005-0050	DOOR LOCK & KEY WITH SCREW & NUT
5	0090-00002-01BK	SINGLE DOOR FRAME
6	0017-00005-0041	421 N.S. CAM
7	0090-00901-0000	DOOR SWITCH
8	0090-00126-01XF	SWITCH BACKUP PLATE
9	0017-00101-0528	#5-40 x 3/4 LONG M.S. (2 REQ'D.)
10	0090-00903-9500	25¢ WINDOW
11	0090-00143-0000	COIN PLEX RETAINER
12	0017-00104-0002	SPLIT LOCK WASHER (2 REQ'D.)
13	0017-00007-0019	KEY HOOK
14	0017-00103-0005	#6-32 HEX NUT (2 REQ'D.)
15	0090-00104-0000	TOP & BOTTOM COIN CHUTE W/BRKT. ASSY.
16	0017-00101-0598	#8-32 x 5/16 SCREW (4 REQ'D.)
17	0010-00181-0100	SPRING
18	0090-00129-00XF	PIVOT POST
19	0010-00134-0000	SPRING
20	0090-00008-0000	ACCEPTOR FRAME ASSY.
21	0093-00155-00XF	REJECTOR LEVER
22	0017-00100-0012	E-RING
23	0090-00162-00XF	COIN SWITCH MTG. BRKT. - SMALL (AMERICAN)
23	0090-00163-00XF	COIN SWITCH MTG. BRKT. - LARGE
24	0017-00005-0203	COIN SWITCH CHUTE - SMALL (AMERICAN)
24	0017-00005-0204	COIN SWITCH CHUTE - LARGE
25	0017-00101-0555	#6-32 x 5/16 SCREW (2 REQ'D.)
26	0017-00005-0195	COIN SWITCH
27	0010-00599-0000	COIN SWITCH WIRE
28	0017-00007-0132	PUSH-ON RING (BLK.)
29	0017-00101-0698	#4-40 x 3/4 SCREW (2 REQ'D.)
30	0090-00128-00XF	SWITCH BRKT. - DOOR TILT
	A090-00061-0000	ANTI-STRING DEVICE ASSY. (REPLACES ITEM 24)
	A090-00064-0000	ANTI-PENNY DEVICE ASSY.

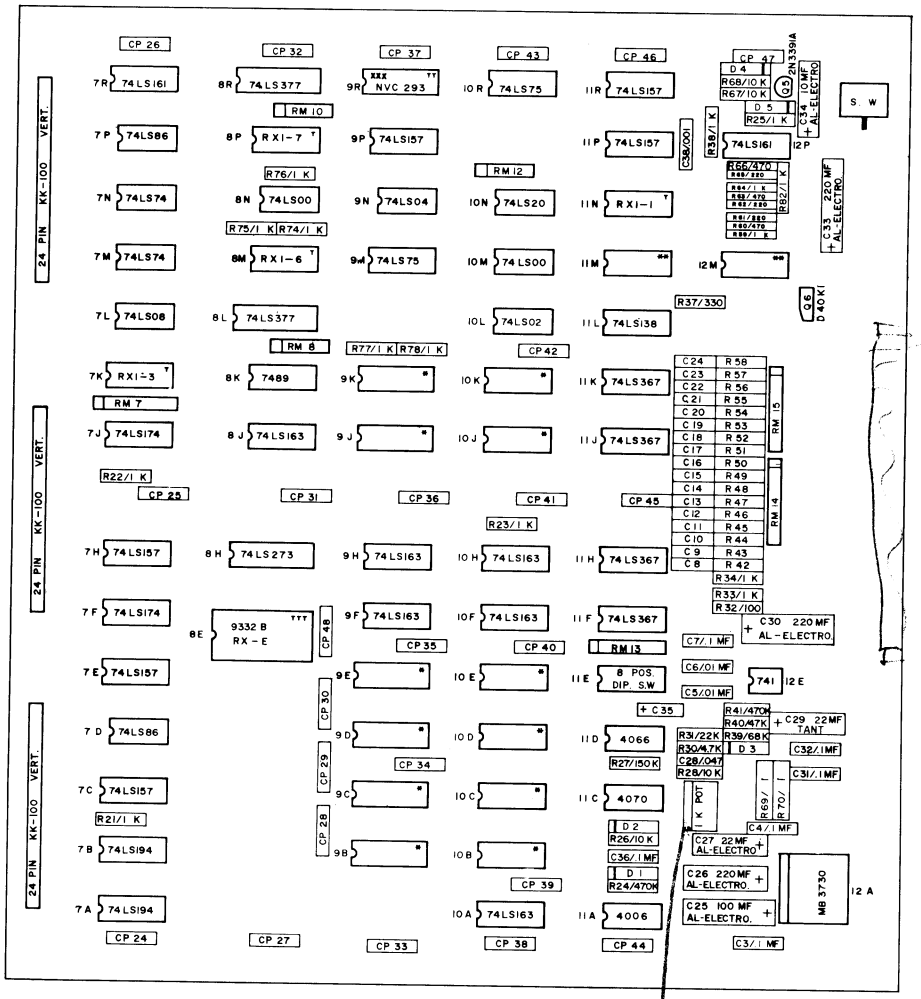

NOTE:

* : W/HEATSINKS AS PER B.O.M.
: PRIMARY - MBM2147H IN LOC. 9B, 9C, 9D, 9E, 9J, 9K
SUB - MBM2147E IN LOC. 9B, 9C, 9D, 9E, 9J, 9K
SUB - 93415. IN LOC. 10B, 10C, 10D, 10E, 10J, 10K

** : PRIMARY - 74LS259 IN LOC 12M
SUB - CD 4099 IN LOC. 11M

T : 16 PIN SOCKET (4 EA)
TT : 18 PIN SOCKET (1 EA)
TTT : 24 PIN SOCKET (1 EA)
D1 - D5 : IN914B
R42 - R58 : 220 Ohm
R69, 70 : 1 Ohm 1/2 W
C4, 31, 32 - .1 MF DISC. CER.
CP24 - CP48, C8 - C24 : .1 MF AX. CER.
C35 : 1 MF TANT
RM7, 13, 14, 15 : 1 K 9 OR 10 PIN SIP
RM8, 10, 12 : 1 K 6 PIN SIP
UNIT UNMARKED CAPS ARE MF & ALL CAPS ARE AX. TYPE
ALL RESISTOR UNIT Ohm
C5, 6 - MYLAR CAPS
XXX : THIS LOCATION CAN UTLIZE EITHER
(A) CUSTOM CHIP NVC 293
OR (B) PLUG IN P.C. A082-91388-A000
VIDEO SHIFTER (293)

M051-00935-C030

DO NOT SCALE DWG	HEAT TREAT	SCALE	USED ON RALLY-X	MIDWAY MFG. CO.
DIM TOLERANCES UNLESS SPECIFIED	MAT'L		NO REQ'D 1 PER	FRANKLIN PK. ILL.
CONCENTRICITY T.I.R. .003 FRACTIONAL ±1/64 DECIMAL ±.005 HOLE DIA +.002 -.000	FINISH		ASS'Y DRAWING LOGIC BD I	PART NO. A082-91385-C000
DRN C.L. CKD DATE 1-9-81				

REVISIONS

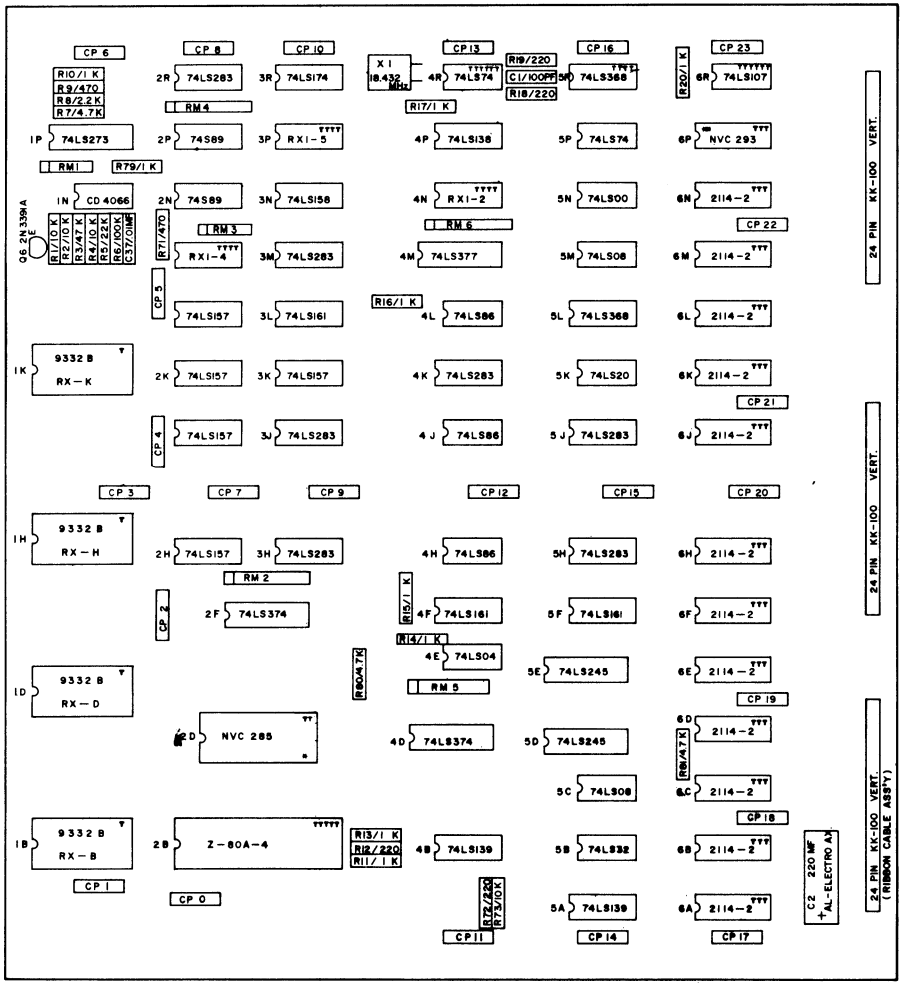

NOTE:

T : 24 PIN SOCKET (4 EA)
TT : 28 PIN SOCKET (1 EA)
TTT : 18 PIN SOCKET (13 EA)
TTTT : 16 PIN SOCKET (4 EA)
TTTTT : 40 PIN SOCKET (1 EA)
TTTTTTT : 14 PIN SOCKET (2 EA)

CP 0 — CP 23 : .1 MF AX. CER.
RM 2, 4, 5, 6 : 1 K 9 OR 10 PIN SIP RESISTOR.
RM 1, 3 : 1 K 6 PIN SIP RESISTOR.

ALL CER. CAPS ARE AX. TYPE.
RESISTOR UNIT : OHM

RICHO 3/4" STAND-OFF

* NOTE : THIS LOCATION CAN UTILIZE EITHER
(A) CUSTOM CHIP NVC 285
OR (B) PLUG IN P.C. A082-91383-B000
Z-80 SYNC BUSS CONTROLLER (285)

** NOTE : THIS LOCATION CAN UTILIZE EITHER
(A) CUSTOM CHIP NVC 293
OR (B) PLUG IN P.C. A082-91388-A000
VIDEO SHIFTER (293)

M051-00935-C029

DO NOT SCALE DWG.	HEAT TREAT	SCALE	USED ON RALLY-X	MIDWAY MFG. CO. FRANKLIN PK. ILL.
DIM TOLERANCES UNLESS SPECIFIED	DRN C.L	MAT'L	NO. REQ'D 1 PER	ASS'Y DRAWING LOGIC BD II
CONCENTRICITY T.I.R. .003 FRACTIONAL ±1/64 DECIMAL ±.005 HOLE DIA +.002 -.000	CKD	FINISH		PART NO. A082-91387-C000
	DATE 1-9-81			

REVISIONS

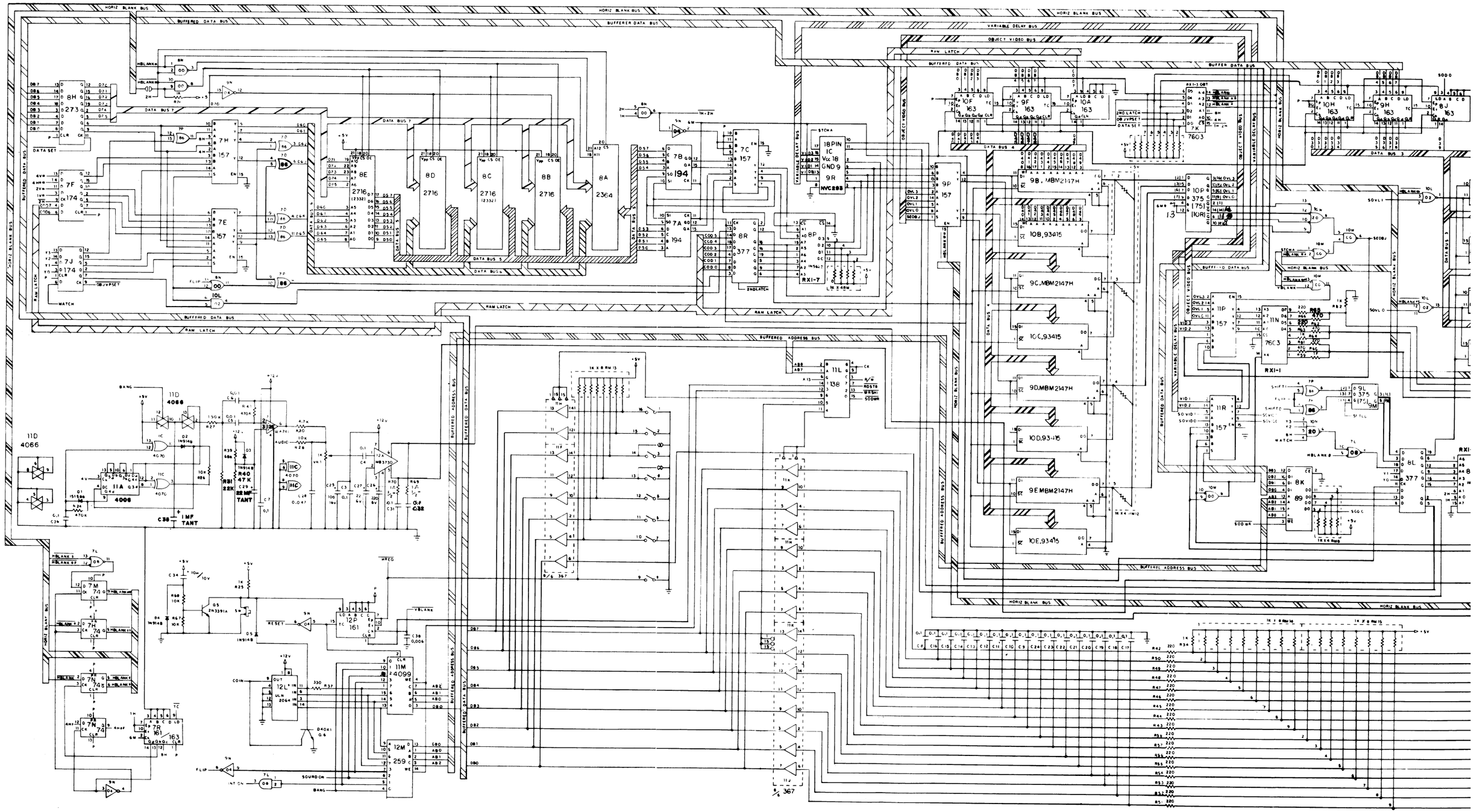
1 +5V
2 +5V
3 +5V
4 GND
5 GND
6 GND
7 GND
8 CO04
9 CO03
10 CO05
11 CO02
12 CO01
13 CO06
14 6M 8
15 FLIP
16 SHIFTO
17 SHIFT 1
18 SFTLD
19 RESET
20 HBLANK
21 1H
22 TC
23 6M
24 WRSHI
25 INTON
26 AB7
27 AB8
28 Φ/Φ
29 CK
30 A13
31 AB1
32 AB2
33 HBLANK 8
34 AB 0
35 AB 3
36 Y2
37 Y3
38 Y1
39 VC
40 MATCH.
41 SOUND ON
42 VBLANK
43 DB4
44 DB7
45 DB6
46 DB5
47 4V
48 HOSTB
49 DB0
50 DB1
51 DB2
52 DB3
53 4H 8
54 4V 8
55 2V 8
56 1V 8
57 COD7
58 COD6
59 WREQ
60 CMPSYNC
61 AUDIO
62 GND
63 GND
64 GND
65 GND
66 GND
67 GND
68 GND
69 GND
70 +5V
71 +5V
72 +5V
HORIZ BLANK BUS
BUFFERED DATA BUS
BUFFERED ADDRESS BUS
VARIABLE DELAY BUS
OBJECT VIDEO BUS
RAM LATCH
DATA BUS 7
DATA BUS 5
DATA BUS 4
DATA BUS 3
DATA BUS
8H 273
7H 157
7F 174
7E 157
7J 174
10L
8E 2716
8D 2716
8C 2716
8B 2716
8A 2364
7B 194
7A 194
7C 157
8R 377
8P
18PIN IC Vcc 18 GND 9 9R
NVC283
RX1-7
9P 157
10F 163
9F 163
10A 163
7K 7603
10H 163
9H 163
8J 163
9B, MBM2147H
10B, 93415
9C, MBM2147H
10C, 93415
9D, MBM2147H
10D, 93415
9E MBM2147H
10E, 93415
10P 375 (75) (10R)
13
11P 157
7603
RX1-1
9L 375 (75) 9M
11R 157
8K 89
6L 377
11D 4066
11A 4066
C38 1MF TANT
R40 47K
R39 68K
R41 470K
R42 470K
R30 10K AUDIO
R26 10K
R27 1.50K
R25 1K
R68 10K
R67 10K
Q5 2N3391A
D4 1N914B
D5 1N914B
D2 1N914B
D3 1N914B
C29 22MF TANT
C32 0.47
C34 10MF 10V
C36 0.006
7M 74
7H 74
7N 74
7R 161
163
12P 161
11M 24099
12M 259
12L* ULN 2064
Q40K1 Q6
11L 138
1K x 8 RM 13
11H 367
8/6 367
11K
11F
11C 4070
11C 407C
11H
RESET
WREQ
VBLANK
COIN
FLIP
INT ON
SOUND ON
BANG
AUDIO
MATCH
SOVL 1
SOVL 0
SOBJ
SOD0
SOD WR
SOVID
SHIFT
RX1-3 OBT
2ND LATCH
OBJVPSET
DATA SET
DATA BUS 4
DATA BUS 3
BUFFERED ADDRESS BUS
BUFFERED DATA BUS
BUFFERED ADDRESS BUS
BUFFERED DATA BUS
DB7
DB6
DB5
DB4
DB3
DB2
DB1
DB0
AB2
AB1
AB0
R42 220
R50 220
R49 220
R48 220
R47 220
R46 220
R45 220
R44 220
R43 220
R56 220
R57 220
R55 220
R54 220
R53 220
R52 220
R51 220
R34 1K
1K x 8 RM 16
1K x 8 RM 15
+5V

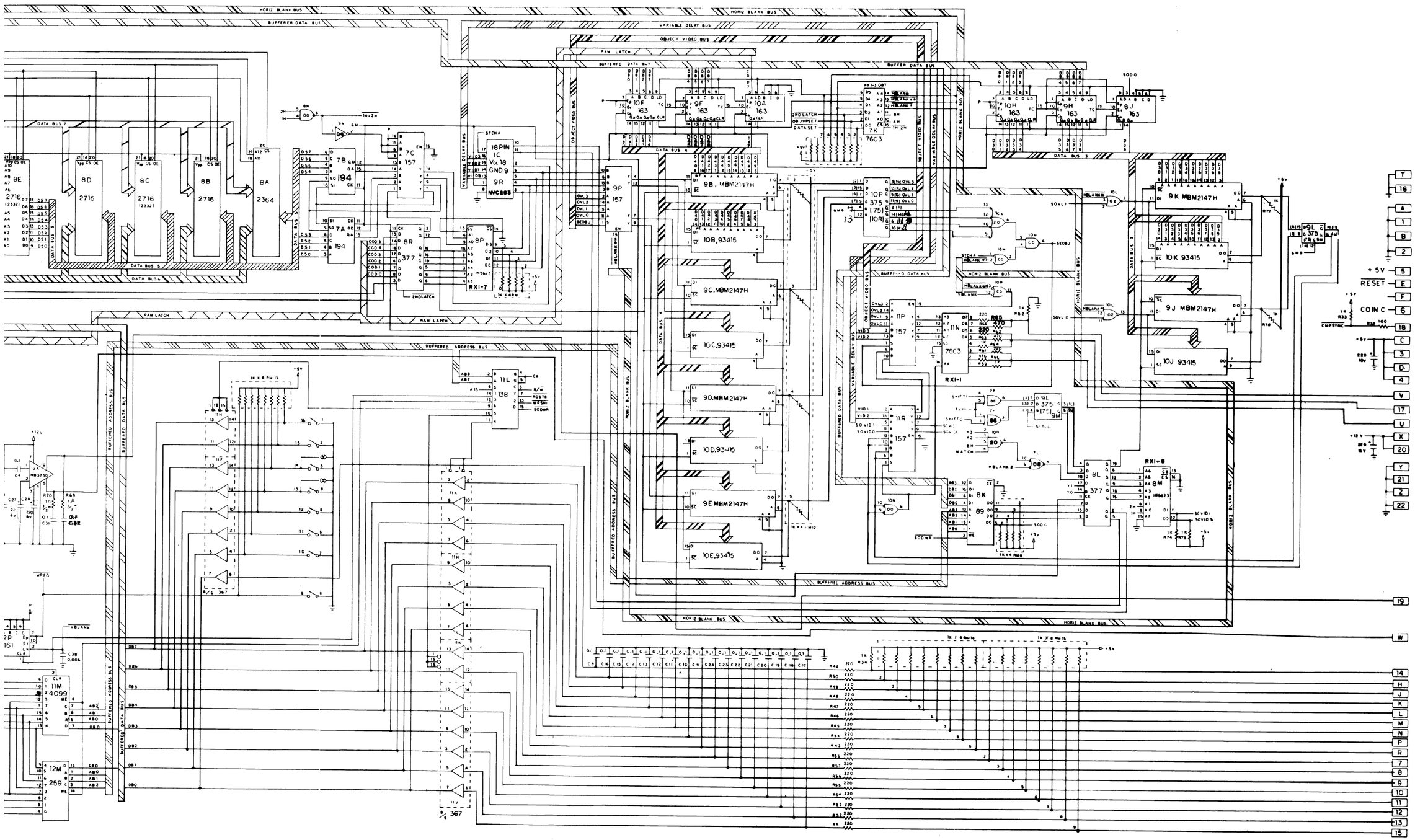
COMM. GND
MONITOR GND
C.T. GND
5 V
PWR CREDIT MULT
CREDIT MULT
COIN METER
COMP. SYNC TO MONITOR
+ 5 V IN
FR. P.S.
BLUE GUN
GRN GUN
RED GUN
+ 12 V IN
FR. P.S.
C.T. GND
12 V.
SPKR
SPKR
TEST POS.
COIN S.W.
1 PLY SELECT
P1 UP
P1 DN
P1 RT
P1 LT
P1 SMOKE
CREDIT S.W.
NC
2 PLY SELECT
P2 UP
P2 DN
P2 RT
P2 LT
P2 SMOKE
TO GND FOR C.T. ONLY
= LOGIC PINS
= BOARD CONNECTOR
P = PULL UP
MIDWAY MFG. CO.
FRANKLIN PARK, ILL.
RALLY-X
LOGIC SCHEMATIC PART NO.
A082-91385-C000
MOSI-00838-C023

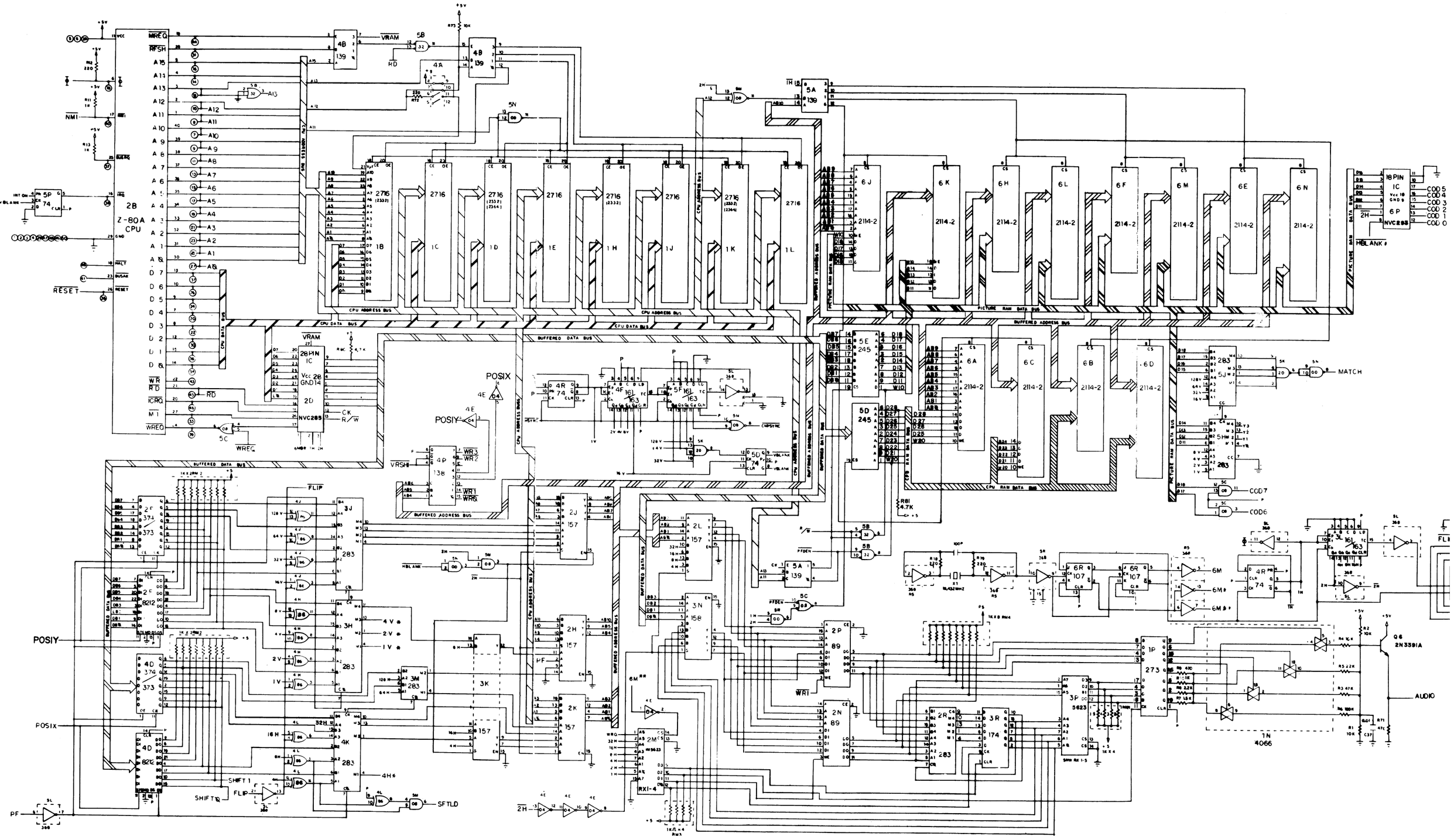
2B
Z-80A
CPU
CPU ADDRESS BUS
CPU DATA BUS
BUFFERED DATA BUS
BUFFERED ADDRESS BUS
PICTURE RAM DATA BUS
CPU RAM DATA BUS
VRAM
POSIX
POSIY
FLIP
SHIFT 1
SFTLD
AUDIO
MATCH
COD 0
COD 1
COD 2
COD 3
COD 4
COD 5
COD 6
COD 7
HBLANK
RESET
NMI
PF

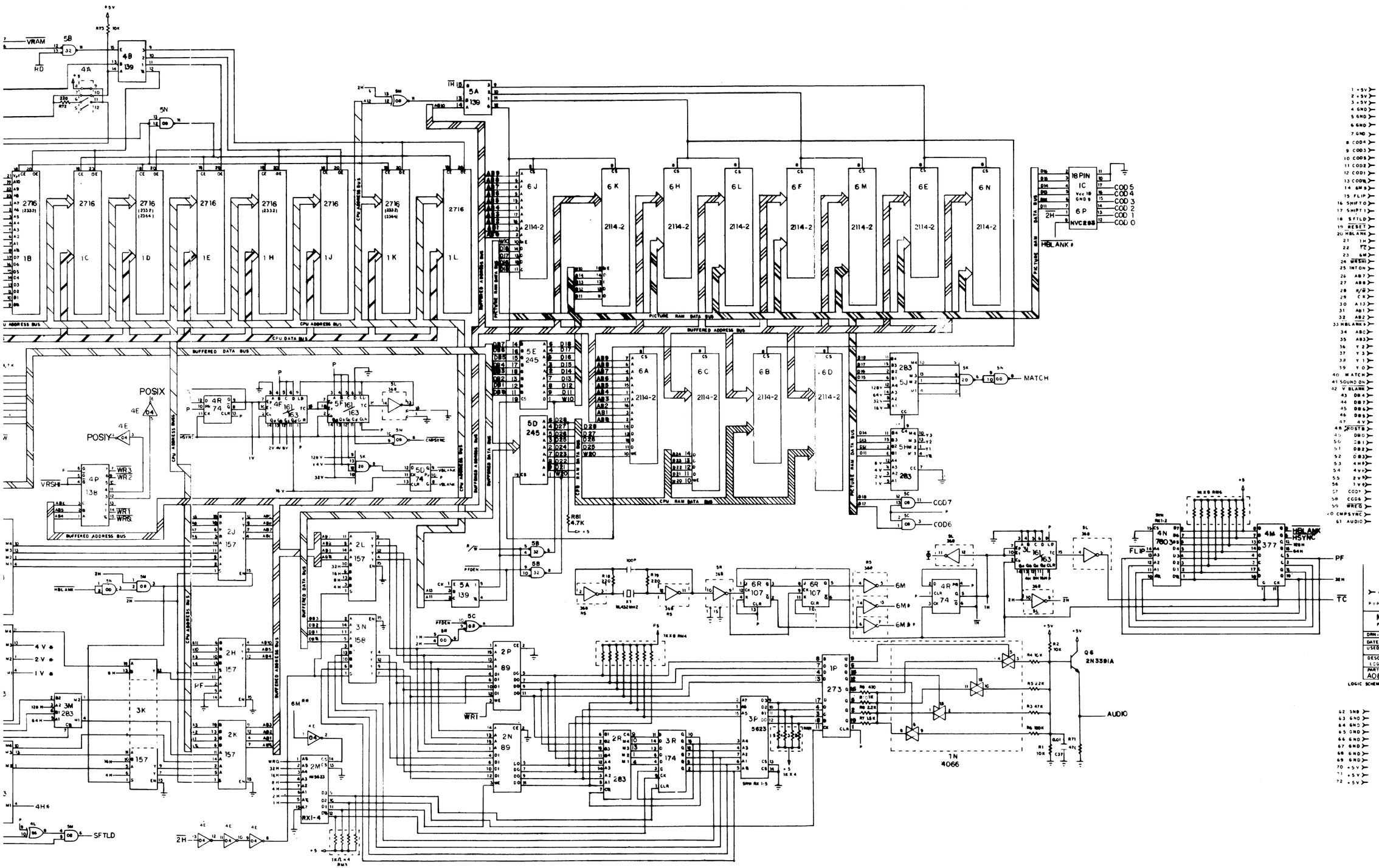
VRAM
RD
POSIX
POSIY
VRSH
HBLANK
SFTLD
MATCH
AUDIO
COD7
COD6
COD5
COD4
COD3
COD2
COD1
COD0
PF
TC
CMPSYNC
VBLANK
FLIP
PFDEN
WR1
WR2
WR3
CPU ADDRESS BUS
CPU DATA BUS
BUFFERED ADDRESS BUS
BUFFERED DATA BUS
PICTURE RAM DATA BUS
CPU RAM DATA BUS
1 +5V
2 +5V
3 +5V
4 GND
5 GND
6 GND
7 GND
8 COD4
9 COD3
10 COD5
11 COD2
12 COD1
13 COD0
14 GMS
15 FLIP
16 SHIFTO
17 SHIFT1
18 SFTLD
19 RESET
20 HBLANK
21 1H
22 TC
23 GM
24 WRSH
25 INTON
26 AB7
27 AB8
28 R/W
29 CK
30 A13
31 AB1
32 AB2
33 HBLANK
34 ABC
35 AB3
36 Y2
37 Y3
38 Y1
39 Y0
40 MATCH
41 SOUND ON
42 V BLANK
43 DB4
44 DB7
45 DB6
46 DB5
47 4V
48 POSTB
49 DB0
50 DB1
51 DB2
52 DB3
53 4H
54 4V
55 2V
56 1V
57 COD7
58 COD6
59 WREQ
60 CMPSYNC
61 AUDIO
62 GND
63 GND
64 GND
65 GND
66 GND
67 GND
68 GND
69 GND
70 +5V
71 +5V
72 +5V
= BOARD CONNECTOR
P = PULL UP
MIDWAY MFG.CO.
FRANKLIN PARK, ILL.
DRN. M.H
CKD.
DATE 1/9/81
NO. REQ'D 1
USED ON RALLY-X
DESC. LOGIC LOGIC BD II
PART NO. A082-91387-C000
LOGIC SCHEMATIC PART NO.
M501-00835-C024

RALLY - X

Logic Board I
A082-91385-C000

PART NUMBER	FUNCTION
74LS00	Quad 2 input Nand
74LS02	Quad 2 input Nor
74LS04	Hex inverter
74LS08	Quad 2 input And
74LS20	Dual 4 input Nand
74LS74	Dual "D" Flip-Flop
74LS75	Quad latch
74LS86	Quad 2 input exclusive or
74S89	64 Bit Ram 16 x 4
74LS138	3 to 8 line decoder
74LS157	Quad 2 to 1 line multiplexer
74LS161	4 Bit binary counter
74LS163	4 Bit binary counter
74LS174	Hex "D" Flip-Flop
74LS194	8 Bit shift register
74LS259	8 Bit addressable latch
74LS273	Octal "D" Flip-Flop
74LS367	Hex buss driver
74LS377	Octal "D" Flip-Flop
4006	18 Bit shift register
4066	Quad bilateral switch - Cmos
4070	Quad exclusive or gate - Cmos
4099	8 Bit addressable latch - Cmos
NVC293	Custom video shifter
A082-91388-A000	Video shifter P.C.
9332	4K x 8 Rom
2532	4K x 8 Eprom
IM5623	256 x 4 Prom
MBM2147	1K x 1 Ram
93415	1K x 1 Ram
82S25	16 x 4 Ram
7603	32 x 8 Prom - tri-state
741	Operational amplifier
MB3730	Audio amplifier
2N3391	NPN transistor
D40K1	NPN transistor
IN914	Diode

Logic Board II
A082-91387-C000

PART NUMBER	FUNCTION
74LS00	Quad 2 input Nand
74LS04	Hex inverter
74LS08	Quad 2 input And
74LS20	Dual 4 input Nand
74LS32	Quad 2 input or
74LS74	Dual "D" Flip-Flop
74LS86	Quad 2 input exclusive or
74S89	64 Bit Ram 16 x 4
74LS107	Dual "JK" Flip-Flop
74LS138	3 to 8 line decoder
74LS139	Dual 2 to 4 line decoder
74LS157	Quad 2 to 1 line multiplexer
74LS158	Quad 2 to 1 line multiplexer - inverting
74LS161	4 Bit binary counter
74LS174	Hex "D" Flip-Flop
74LS245	Octal buss transceiver
74LS273	Octal "D" Flip-Flop
74LS293	4 Bit full adder
74LS368	Hex buss driver - inverting
74LS374	Octal "D" Flip-Flop Tri-state
74LS377	Octal "D" Flip-Flop
NVC285	Custom Z80 sync buss controller
A082-91383-B000	Z80 sync buss controller P.C.
NVC293	Custom video shifter
A082-91388-A000	Video shifter P.C.
Z80	CPU
9332	4K x Rom
2532	4K x 8 Eprom
IM5623	256 x 4 Prom
7603	32 x 8 Prom - tri-state
2114	1K x 4 Ram
82S25	16 x 4 Ram
4066	Quad bilateral switch
18.432 mhz	Crystal
2N3391	NPN transistor

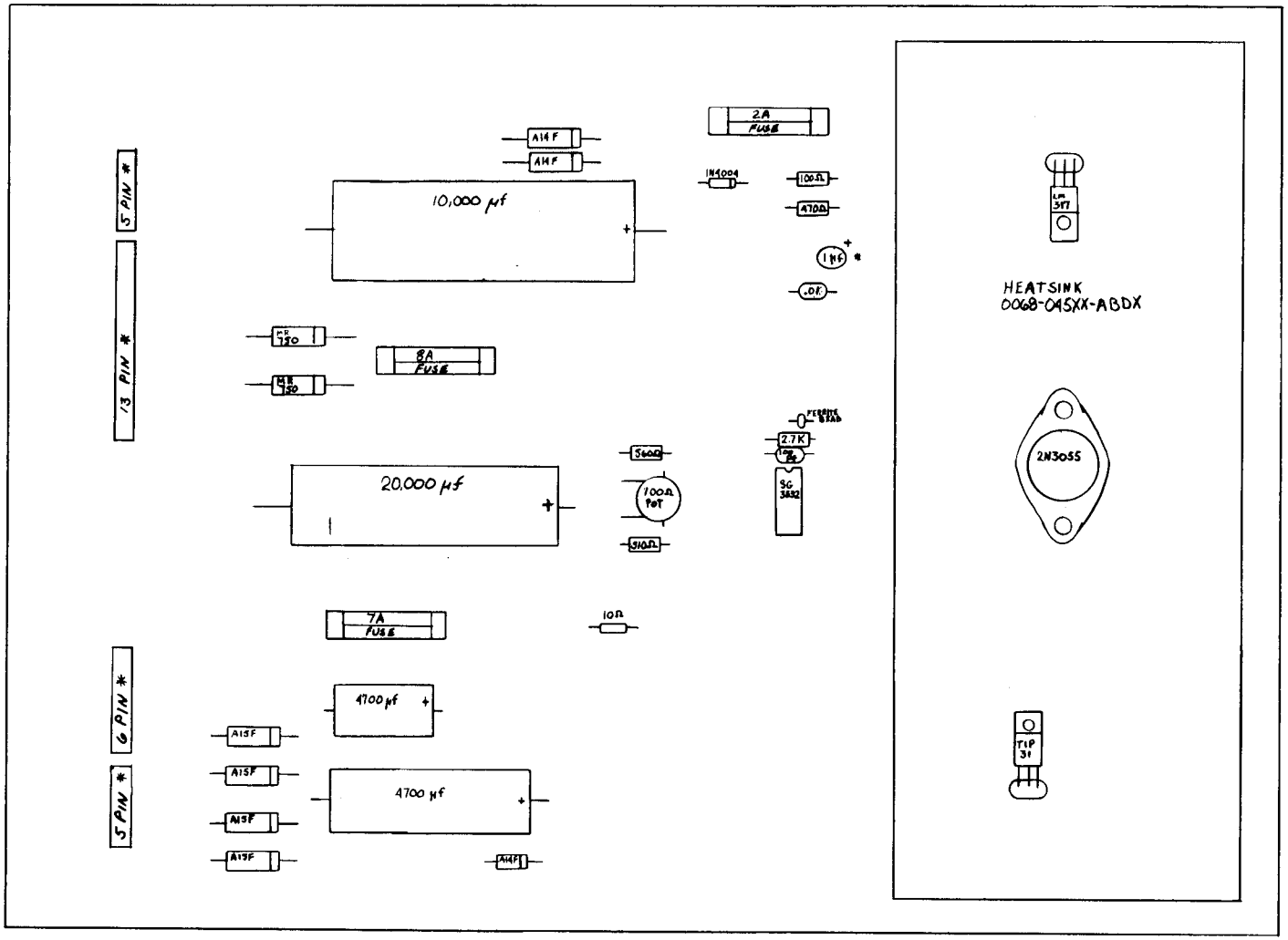

NOTE * AX. TANT OR RD. TANT

* NOTE: RIGHTANGLE KK.156

DRWG NO. M051-00935-C028

DO NOT SCALE DWG.		HEAT TREAT	SCALE	USED ON RALLY-X
DIM. TOLERANCES UNLESS SPECIFIED	DRN. TJK	MAT'L.	RALLY-X Power Supply ASSMB DRWG	NO. REQ'D 1
CONCENTRICITY T.I.R. .003 FRACTIONAL ± 1/64 DECIMAL ± .005 HOLE DIA. +.003 -.000	CKD.	FINISH		
	DATE 16 JAN 81			

REVISIONS

MIDWAY MFG. CO.
FRANKLIN PK., ILL.

PART NO. A084-90414-C935

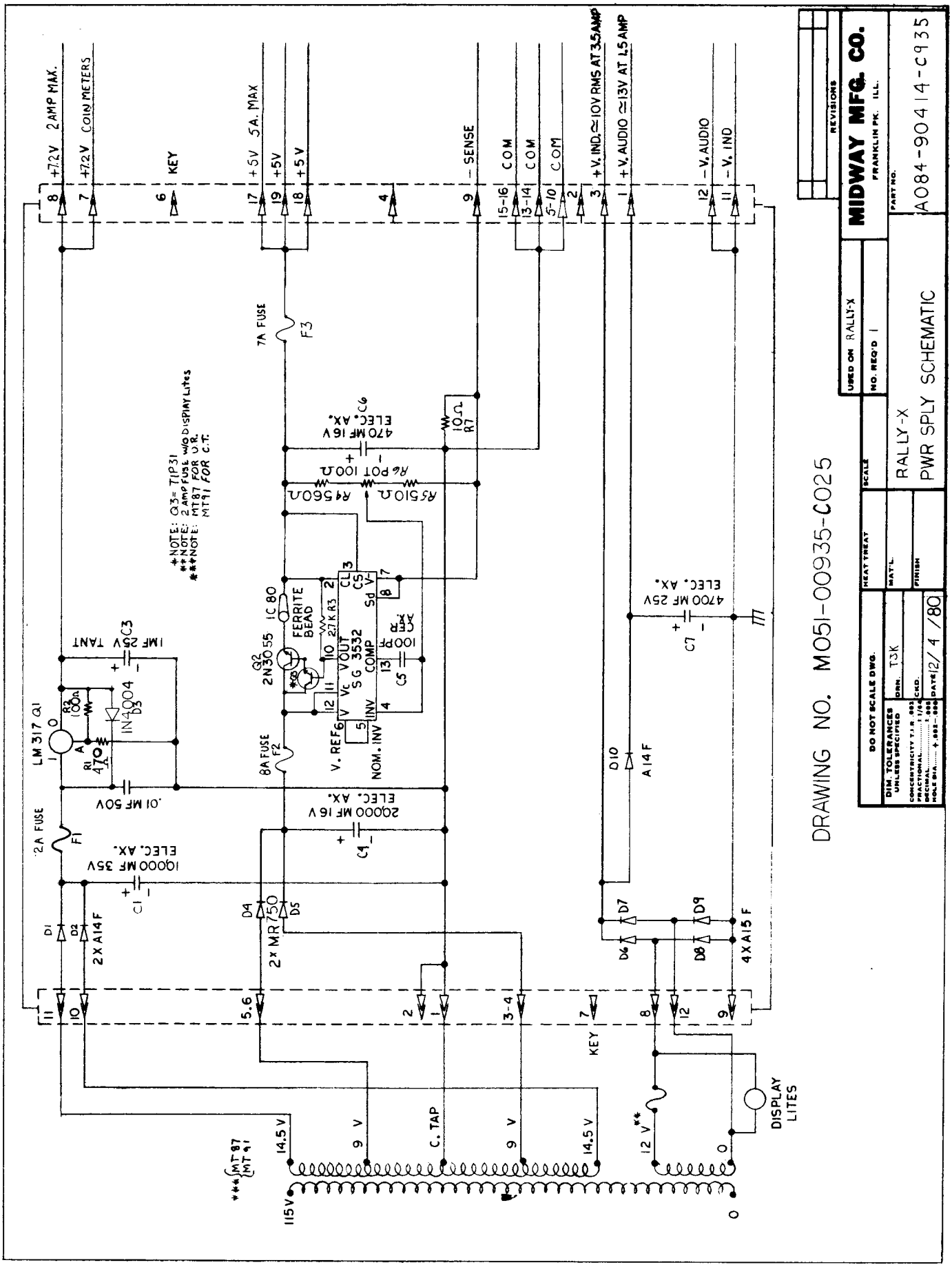
+7.2V 2AMP MAX.
+7.2V COIN METERS
KEY
+5V 5A. MAX
+5V
+5 V
- SENSE
COM
COM
COM
+V. IND.≃10V RMS AT 3.5AMP
+V. AUDIO ≃13V AT 1.5AMP
-V. AUDIO
-V. IND
7A FUSE
F3
470 MF 16 V ELEC. AX.
C6
10Ω R7
R6 POT 100Ω
R5 510Ω
R4 560Ω
*NOTE: Q3= T1P31
**NOTE: 2 AMP FUSE W/O DISPLAY LITES
***NOTE: MT87 FOR U.R. MT91 FOR C.T.
IC 80
FERRITE BEAD
Q2 2N3055
2.7K R3
VOUT
VC
SG 3532
COMP
V. REF
NOM. INV
INV
CL
CS
Sd
V-
100PF
C5
IMF 25V TANT
C3
LM 317 Q1
R2 100Ω
D3 IN4004
R1 470Ω
.01 MF 50V
8A FUSE
F2
20000 MF 16 V ELEC. AX.
C4
2A FUSE
F1
10000 MF 35V ELEC. AX.
C1
D1
D2
2X A14 F
D4
D5
2X MR 750
4700 MF 25V ELEC. AX.
C7
D10
A14 F
D6
D7
D8
D9
4X A15 F
DISPLAY LITES
115V
14.5 V
9 V
C. TAP
9 V
14.5 V
12 V**
0
***MT87 MT91
REVISIONS
MIDWAY MFG. CO.
FRANKLIN PK. ILL.
PART NO. A084-90414-C935
USED ON RALLY-X
NO. REQ'D 1
SCALE
RALLY-X
PWR SPLY SCHEMATIC
HEAT TREAT
MAT'L.
FINISH
DO NOT SCALE DWG.
DIM. TOLERANCES UNLESS SPECIFIED
DRN. TJK
CKD.
DATE 12/4/80
DRAWING NO. M051-00935-C025

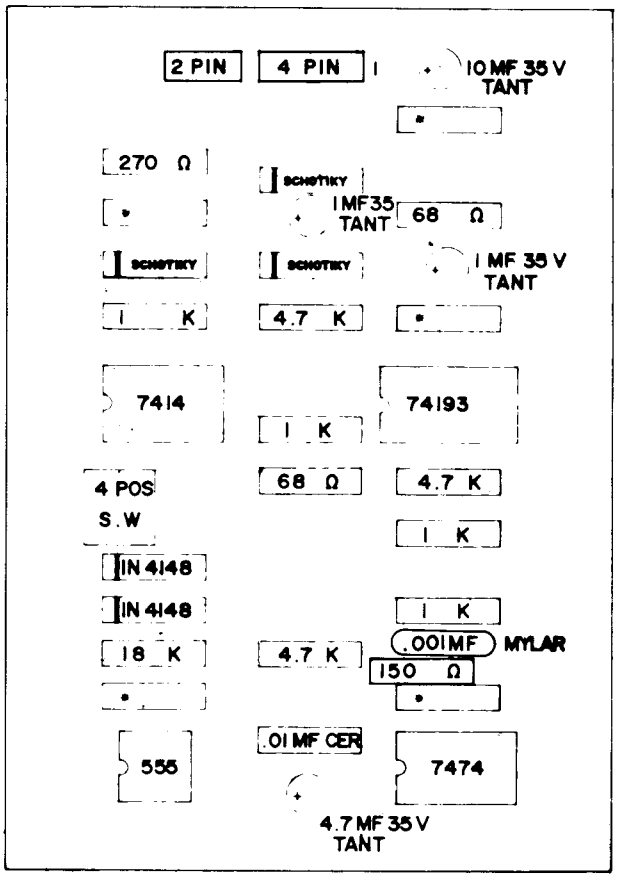

M051-00932-C027

* 1 MF 50 V CER. AX.

SCHOTTKY DIODE – IN5818 OR IN5817

REVISIONS

MIDWAY MFG. CO.

FRANKLIN PK ILL

PART NO A082-91348-C000

USED ON PAC-MAN

NO REQ'D

SCALE

ASSEMBLY DRAWING

CREDIT MULTIPLIER P.C

HEAT TREAT

MAT'L

FINISH

DO NOT SCALE DWG

DRN

CKD

DATE 10/22/80

DIM TOLERANCES UNLESS SPECIFIED

CONCENTRICITY T I R .003

FRACTIONAL ±1/64

DECIMAL ±.005

HOLE DIA +.002 .000

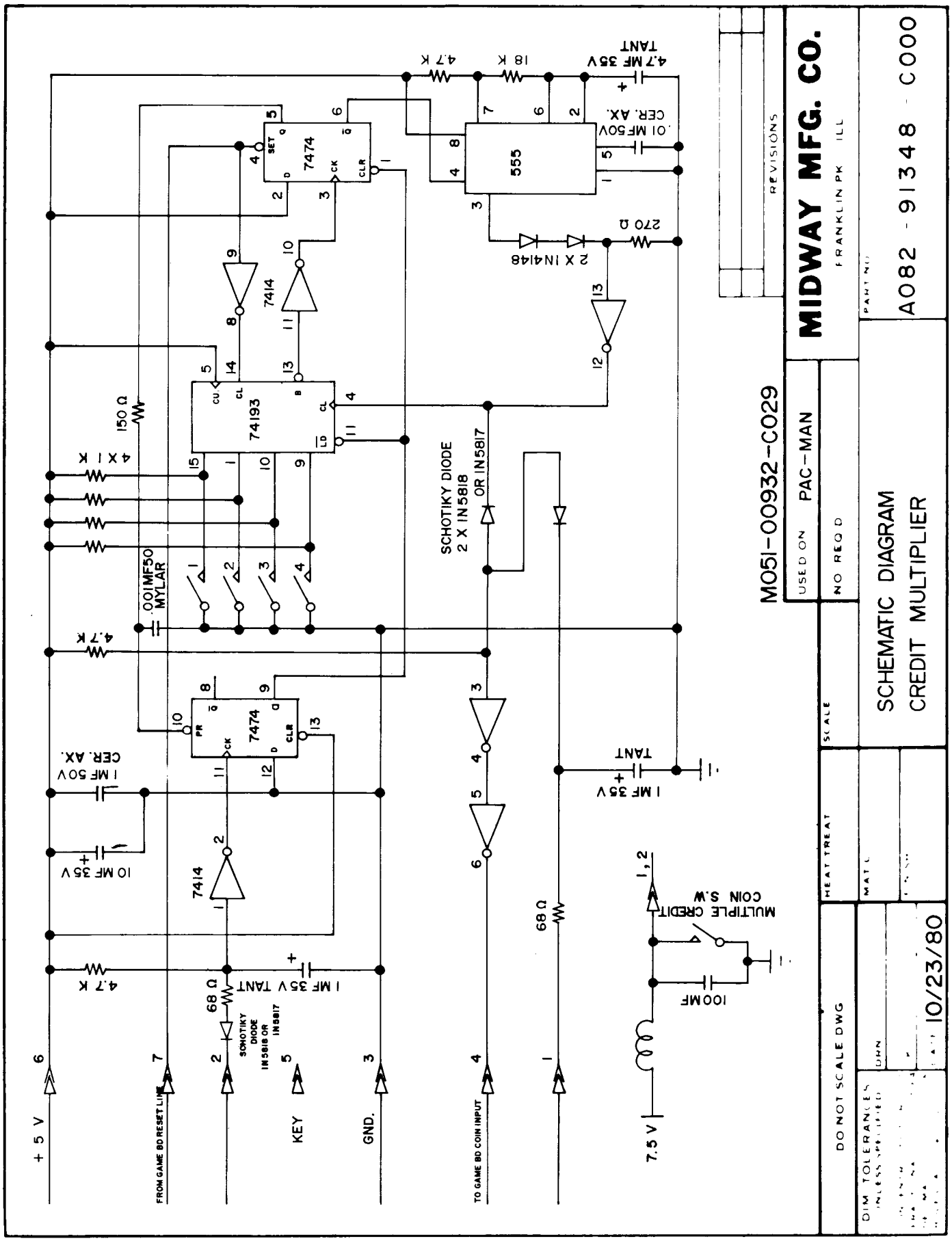
MIDWAY MFG. CO.
FRANKLIN PK ILL
REVISIONS
PART NO
A082 - 91348 - C000
M051-00932-C029
USED ON PAC-MAN
NO REQ D
SCALE
SCHEMATIC DIAGRAM
CREDIT MULTIPLIER
HEAT TREAT
MATL
DO NOT SCALE DWG
DIM TOLERANCES
DRN
DATE 10/23/80
+5 V
FROM GAME BD RESET LINE
KEY
GND.
TO GAME BD COIN INPUT
7.5 V
MULTIPLE CREDIT COIN S.W
100MF
68 Ω
1MF 35V TANT
SCHOTIKY DIODE IN5818 OR IN5817
4.7K
10 MF 35V
1MF 50V CER. AX.
7414
7474
74193
555
150 Ω
4X1K
.001MF50 MYLAR
SCHOTIKY DIODE 2 X IN5818 OR IN5817
2 X IN4148
270 Ω
.01 MF50V CER. AX.
18 K
4.7MF 35V TANT

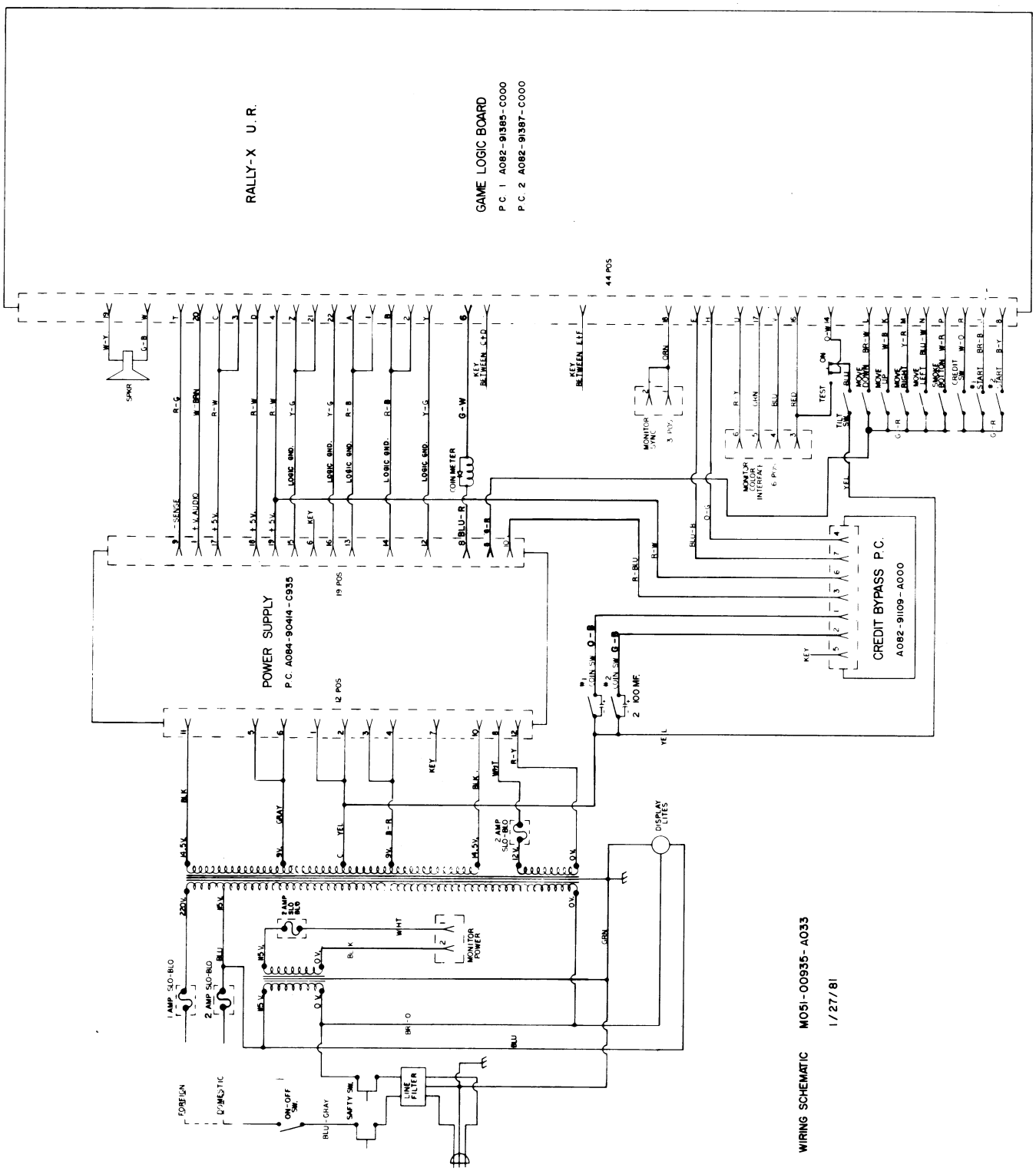
RALLY-X U.R.
GAME LOGIC BOARD
P.C. 1 A082-91385-C000
P.C. 2 A082-91387-C000
44 POS
POWER SUPPLY
P.C. A084-90414-C935
19 POS
12 POS
CREDIT BYPASS P.C.
A082-91109-A000
MONITOR POWER
DISPLAY LITES
LINE FILTER
SAFTY SW.
ON-OFF SW.
FOREIGN
DOMESTIC
1 AMP SLO-BLO
2 AMP SLO-BLO
COIN METER
TILT SW.
TEST
MOVE DOWN
MOVE UP
MOVE RIGHT
MOVE LEFT
SMOKE BUTTON
CREDIT SW.
START
SPKR
MONITOR SYNC.
MONITOR COLOR INTERFACE
KEY BETWEEN C+D
KEY BETWEEN E+F
WIRING SCHEMATIC M051-00935-A033
1/27/81

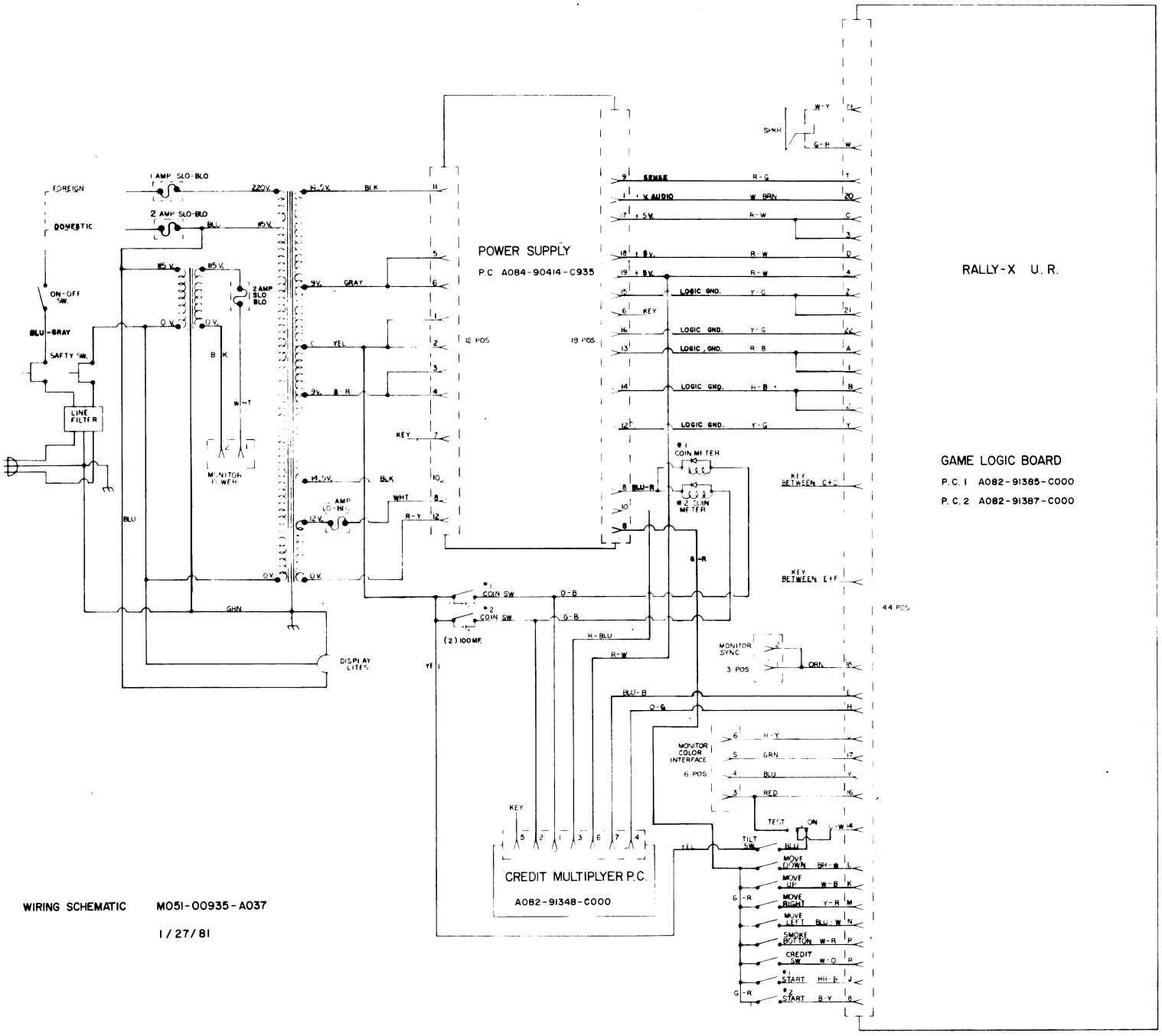

WIRING SCHEMATIC M051-00935-A037

1/27/81

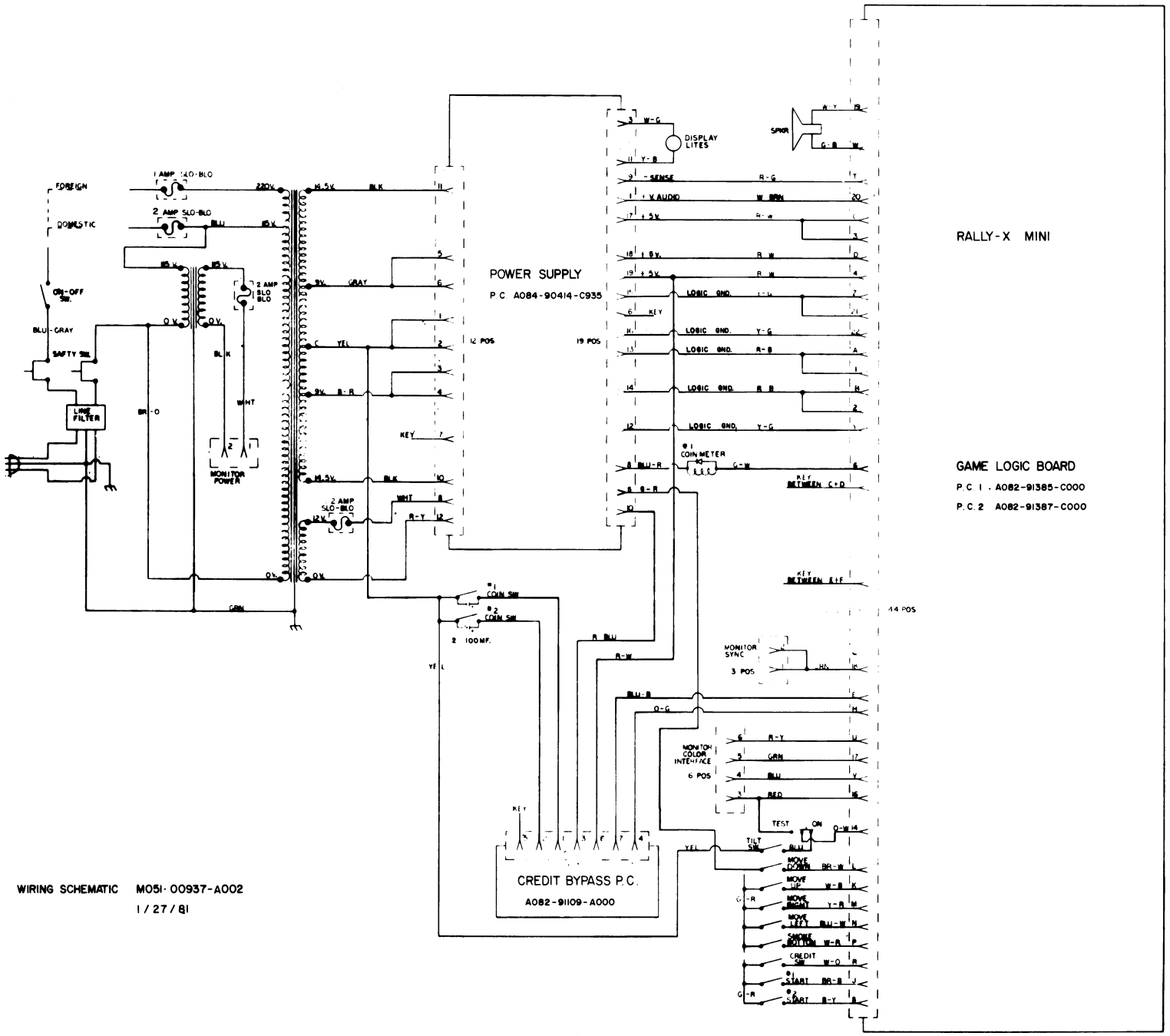

WIRING SCHEMATIC M051-00937-A002
1/27/81

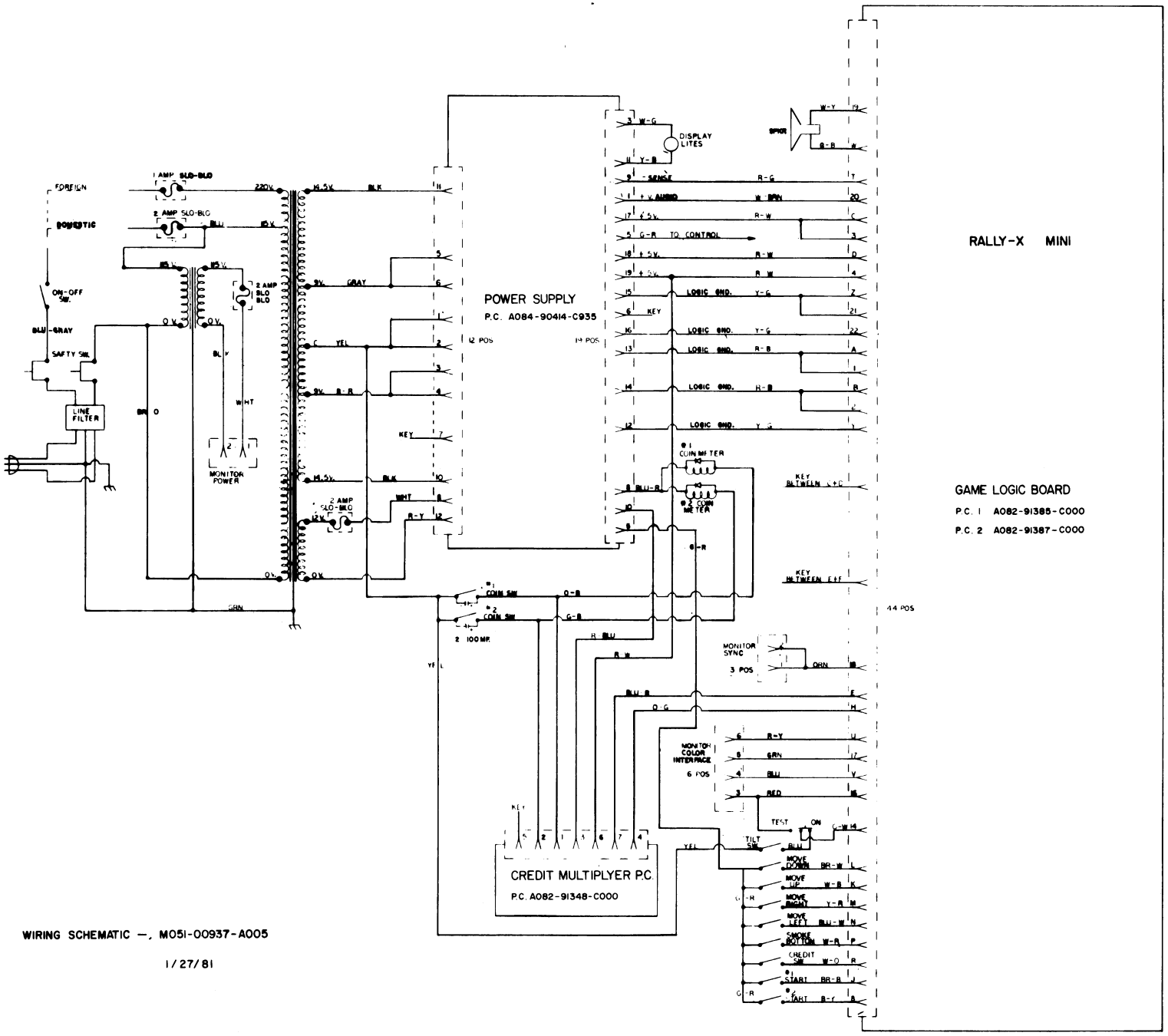

WIRING SCHEMATIC —, M051-00937-A005

1/27/81

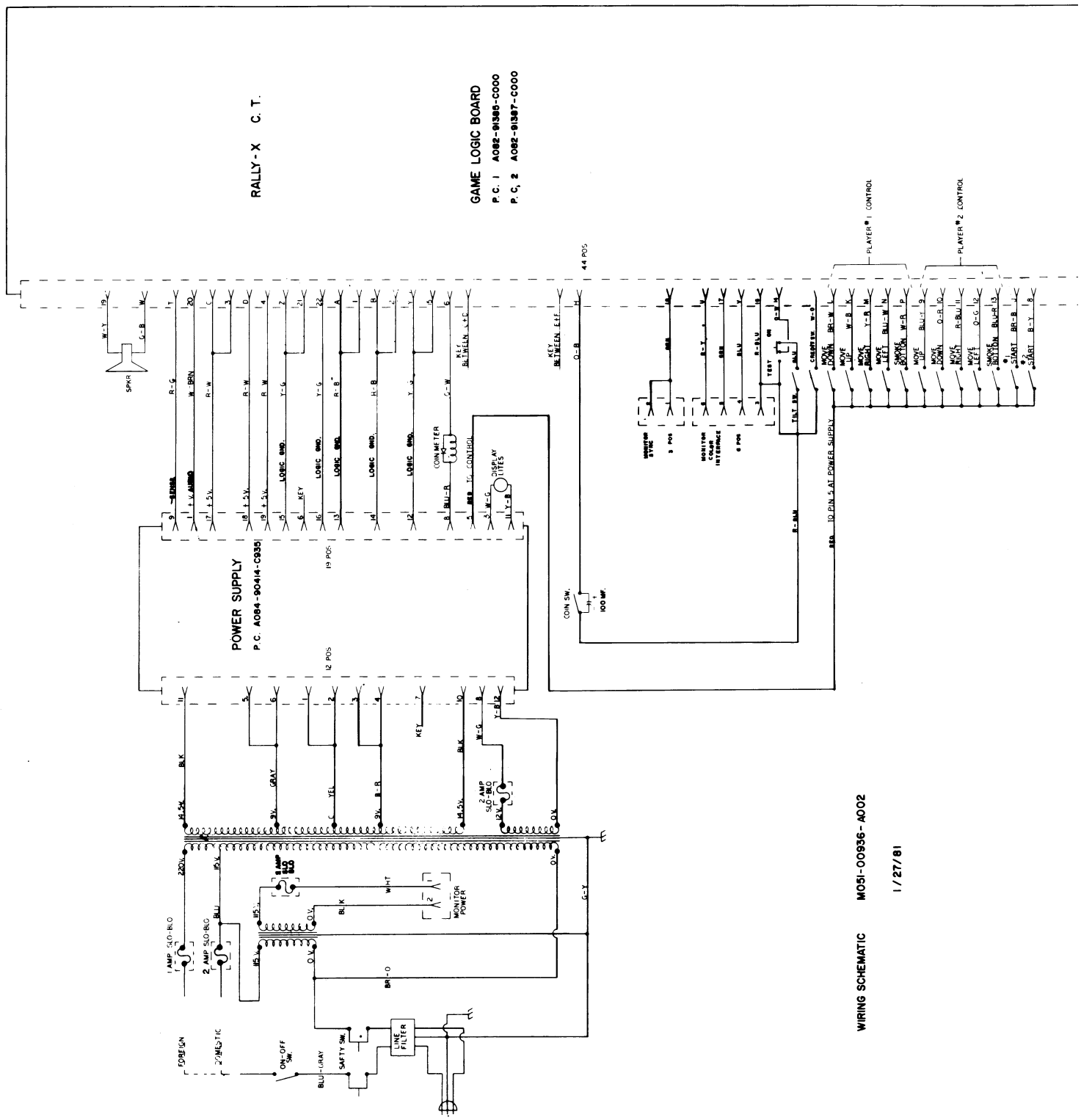
RALLY-X C. T.
GAME LOGIC BOARD
P.C. 1 A082-91385-C000
P.C. 2 A082-91387-C000
POWER SUPPLY
P.C. A084-90414-C935
PLAYER #1 CONTROL
PLAYER #2 CONTROL
44 POS
19 POS
12 POS
10 PIN 5 AT POWER SUPPLY
COIN SW.
100 MF.
COIN METER
DISPLAY LITES
TO CONTROL
SPKR
MONITOR POWER
LINE FILTER
SAFTY SW.
ON-OFF SW.
FOREIGN
DOMESTIC
1 AMP SLO-BLO
2 AMP SLO-BLO
WIRING SCHEMATIC M051-00936-A002
1/27/81