This document has been downloaded from:

The largest resource for amusement machines documentation on the world wide web!

FLIPPERSPILL.COM

SUPER CONTRA™

INSTRUCTION MANUAL

SUPER CONTRA™ is a registered trademark of Konami Inc. © 1988 Konami Inc.
KONAMI® is a trademark of Konami Industry Co., Ltd.

TABLE OF CONTENTS

	Page
Wiring Harness	1
AC Flow Chart	2
Wiring Diagram	3
Dip Switch Settings	4
Coin Door Assembly	5-8

SUPER CONTRA: WIRING HARNESS

WIRE COLOR KEY:

	Solder Side ←			→ Parts Side	
BLACK	GND	A	1	GND	BLACK
BLACK	GND	B	2	GND	BLACK
RED	+5V DC	C	3	+5V DC	RED
RED	+5V DC	D	4	+5V DC	RED
	NOT USED	E	5	NOT USED	
ORANGE	+12V DC	F	6	+12V DC	ORANGE
	*KEY	H	7	*KEY	
BROWN/YELLOW	COIN COUNTER 2	J	8	COIN COUNTER 1	GREEN/GRAY
	(EMPTY)	K	9	(EMPTY)	
	SPEAKER (-)	L	10	SPEAKER (+)	
	(EMPTY)	M	11	(EMPTY)	
WHITE/GREEN	VIDEO GREEN	N	12	VIDEO RED	RED/WHITE
WHITE	VIDEO SYNC	P	13	VIDEO BLUE	BLUE/WHITE
RED/YELLOW	SERVICE SW	R	14	VIDEO GROUND	BLACK
	(EMPTY)	S	15	(EMPTY)	
VIOLET/WHITE	COIN 2	T	16	COIN 1	BLUE/BROWN
RED/GREEN	2P START	U	17	1P START	PINK/YELLOW
BLUE/YELLOW	2P UP	V	18	1P UP	ORANGE/WHITE
VIOLET/YELLOW	2P DOWN	W	19	1P DOWN	BLACK/WHITE
ORANGE/GREEN	2P LEFT	X	20	1P LEFT	RED/GRAY
ORANGE/YELLOW	2P RIGHT	Y	21	1P RIGHT	GRAY/WHITE
BLACK/YELLOW	2P SHOOT	Z	22	1P SHOOT	PINK/WHITE
ORANGE/GRAY	2P JUMP	a	23	1P JUMP	GREEN/BROWN
	NOT USED	b	24	NOT USED	
	NOT USED	c	25	NOT USED	
	NOT USED	d	26	NOT USED	
BLACK	GND	e	27	GND	BLACK
BLACK	GND	f	28	GND	BLACK

(BASE COLOR/LINE COLOR)

SUPER CONTRA: AC FLOW CHART

1. GREEN/YELLOW
2. BLACK
3. RED
4. BLUE
5. BROWN
6. RED/BLACK
7. BLACK/WHITE
8. WHITE
9. GREEN
10. VIOLET
11. ORANGE

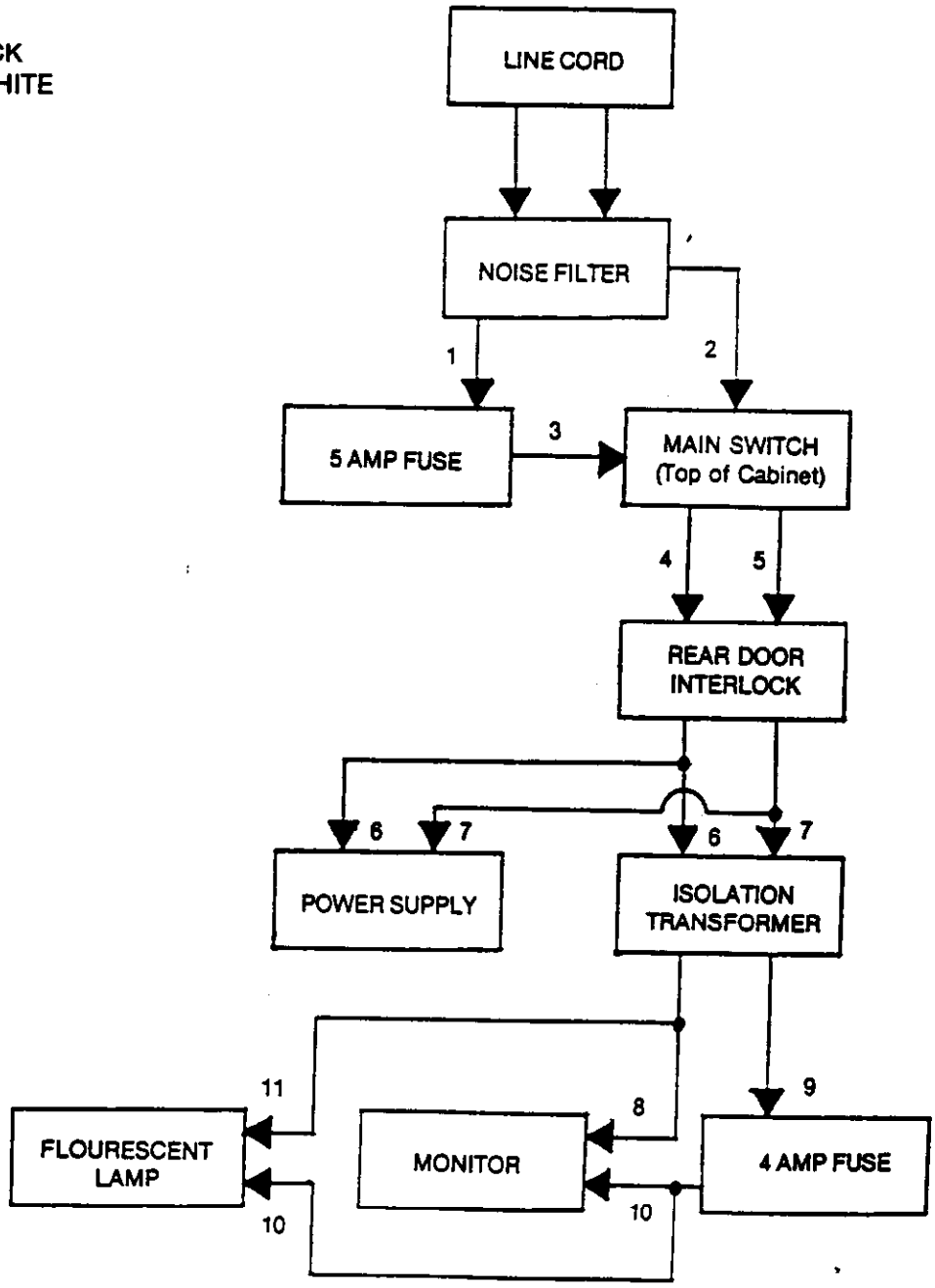

SUPER CONTRA: WIRING DIAGRAM

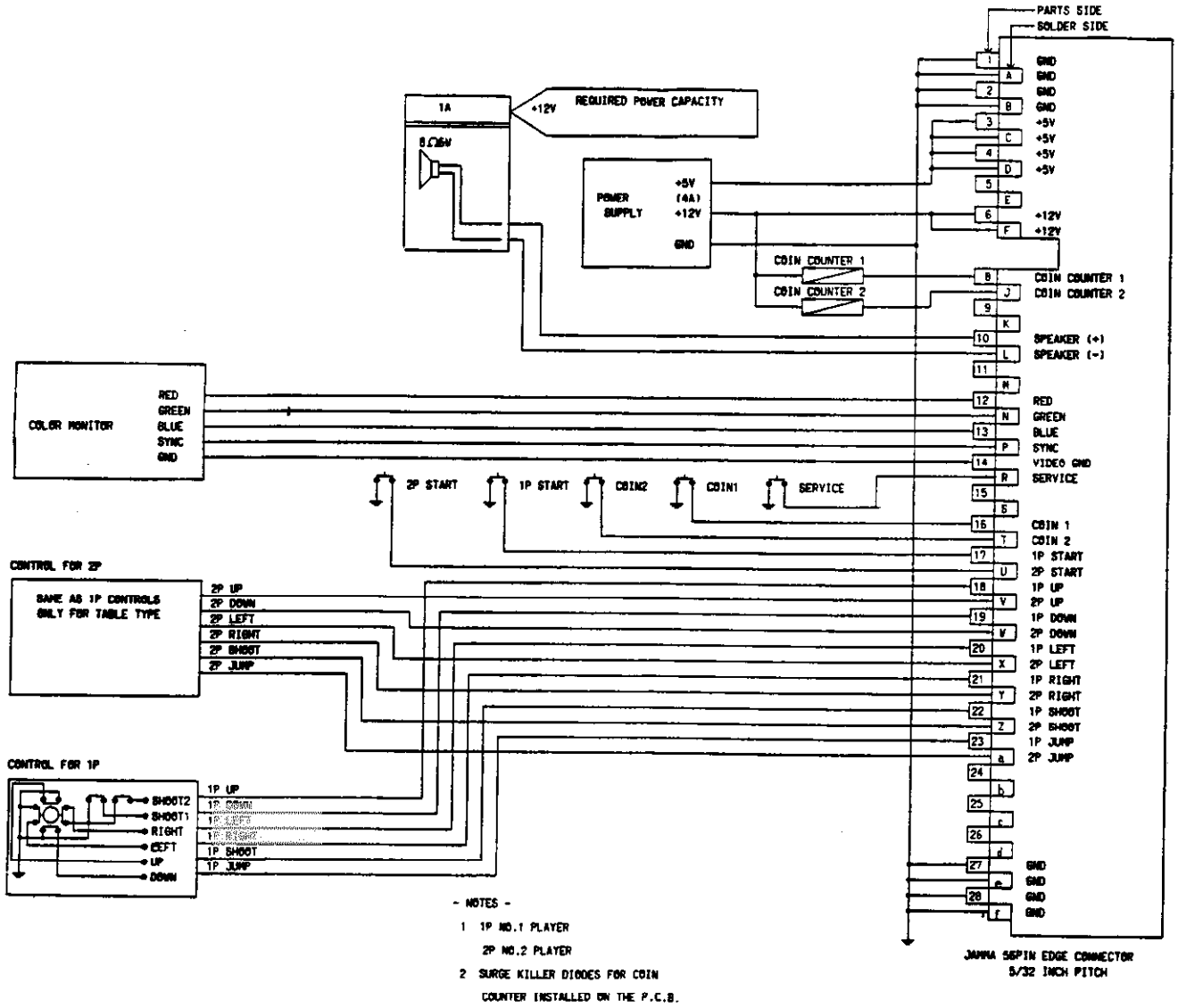

- NOTES -

1 1P NO.1 PLAYER

2P NO.2 PLAYER

2 SURGE KILLER DIODES FOR COIN COUNTER INSTALLED ON THE P.C.B.

DIP SWITCH SETTINGS

DIP SWITCH NO. 1 SETTINGS

1. COIN 1

SW	1	2	3	4	COIN	PLAY
•	OFF	OFF	OFF	OFF	1	1
	ON	OFF			1	2
	OFF	ON			1	3
	ON	ON			1	4
	OFF	OFF	ON	OFF	1	5
	ON	OFF			1	6
	OFF	ON			1	7
	ON	ON			2	1
	OFF	OFF	OFF	ON	2	3
	ON	OFF			2	5
	OFF	ON			3	1
	ON	ON			3	2
	OFF	OFF	ON	ON	3	4
	ON	OFF			4	1
	OFF	ON			4	3
	ON	ON			FREEPLAY	

FREEPLAY: You can play game without coins.

2. COIN 2

SW	5	6	7	8	COIN	PLAY
•	OFF	OFF	OFF	OFF	1	1
	ON	OFF			1	2
	OFF	ON			1	3
	ON	ON			1	4
	OFF	OFF	ON	OFF	1	5
	ON	OFF			1	6
	OFF	ON			1	7
	ON	ON			2	1
	OFF	OFF	OFF	ON	2	3
	ON	OFF			2	5
	OFF	ON			3	1
	ON	ON			3	2
	OFF	OFF	ON	ON	3	4
	ON	OFF			4	1
	OFF	ON			4	3
	ON	ON			VOID	

DIP SWITCH NO. 2 SETTINGS

1. THE NUMBER OF PLAYER'S LIFE

SW	1	2	NUMBER
•	OFF	OFF	2
	ON	OFF	3
	OFF	ON	5
	ON	ON	7

2. CHANGE OF TABLE/UPRIGHT

SW	3	TYPE
	OFF	TABLE
•	ON	UPRIGHT

3. BONUS LIFE

SW	4	5	BONUS LIFE
•	OFF	OFF	At 30,000 pts. and 200,000 pts.
	ON		At 50,000 pts. and 300,000 pts.
	OFF	ON	At 30,000 pts. only
	ON	ON	At 50,000 pts. only

4. DIFFICULTY OF THE GAME

SW	6	7	DIFFICULTY
•	OFF	OFF	EASY
	ON	OFF	NORMAL
	OFF	ON	DIFFICULT
	ON	ON	VERY DIFFICULT

5. SOUND IN ATTRACTIVE MODE

SW	8	SOUND
	OFF	OFF
•	ON	ON

DIP SWITCH NO.3 SETTINGS

1. VIDEO SCREEN FLIP

SW	1	VIDEO SCREEN (Monitor)
•	OFF	NORMAL
	ON	UPSIDE DOWN

2. CHANGE OF MODE

SW	3	MODE
•	OFF	GAME MODE
	ON	CHECK MODE

3. CONTINUATION

SW	4	1 PLAYER PLAY	2 PLAYER PLAY
	OFF	Up to 3 times	Up to twice altogether
•	ON	Up to 5 times	Up to 4 times altogether

SW2 is not used.

• Shows recommended settings

COMPLETE COIN DOOR ASSEMBLY
EXPLODED VIEW

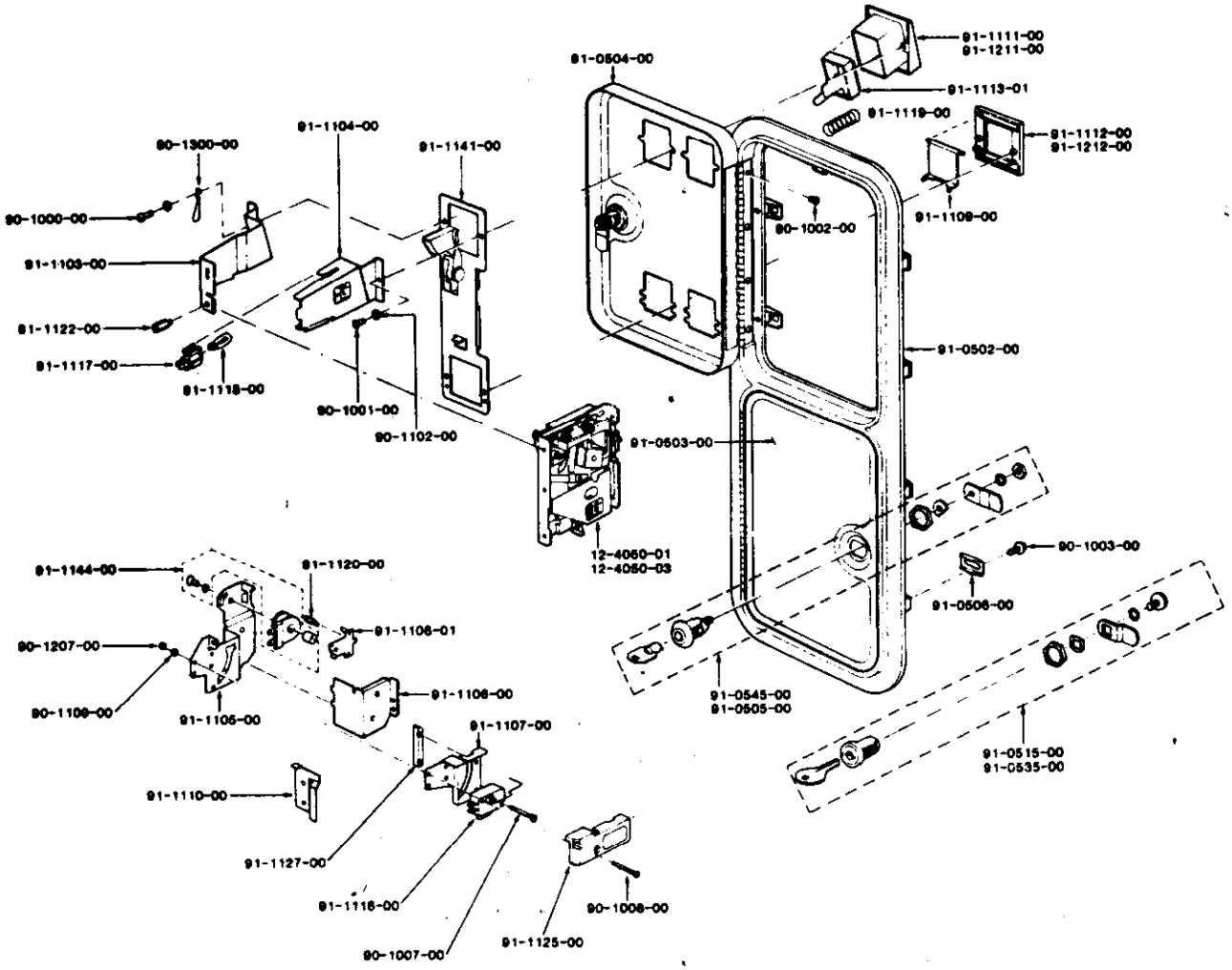

PARTS LIST

12-4050-01	S-10 Acceptor Body U.S. 25¢	90-1102-00	Washer for Bezel Screw	91-1103-00	Coin Inlet Lamp Side	91-1119-00	Buttton Spring
12-4050-03	S-10 Acceptor Body Canadian 25¢	90-1207-00	Nut for Microswitch Mounting Screw	91-1104-00	Coin Inlet Cover Side	91-1120-00	Lockout Spring
20-4177-00	Plastic Cash Box	90-1300-00	Keyhook	91-1105-00	Reject Cup Side Plate	91-1122-00	Retaining Screw for Acceptor Body
20-4179-00	Steel Enclosure	91-0502-00	Zinc Die Cast Frame	91-1106-00	Reject Cup Base Plate	91-1125-00	Clear Plastic Cover for Microswitch
22-1400-00	Locking Bar	91-0503-00	Lower Door	91-1107-00	Microswitch Bracket	91-1127-00	Plastic Switch Adjuster
24-1150-00	Wire Harness	91-0504-00	Upper Door	91-1108-01	Lockout Flap U.S. 25¢	91-1141-00	Base Plate With Pivot and Stud
90-1000-00	Keyhook Bezel Screw	91-0505-00	Round Lock and Cam Assembly	91-1109-00	Reject Flap	91-1144-00	6 Volt DC Lockout Coil Assembly
90-1001-00	Bezel Screw	91-0506-00	Clamp	91-1110-00	Metal Switch Adjuster	91-1211-00	Zinc Plated Button Bezel
90-1002-00	Hinge Screw	91-0515-00	Flat Lock and Cam Assembly	91-1111-00	Black Button Bezel	91-1212-00	Zinc Plated Reject Bezel
90-1003-00	Clamp Screw	91-0535-00	Flat Lock and Cam Assembly	91-1112-00	Black Reject Bezel		
90-1007-00	Flat Head Microswitch Mounting Screw	91-0545-00	Round Lock and Cam Assembly	91-1113-01	Entry/Reject Button U.S. 25¢		
90-1008-00	Panhead Microswitch Mounting Screw			91-1116-00	Microswitch (Black End Arm)		
				91-1117-00	Lampholder		
				91-1118-00	6 V Wedge Base Lamp		

Gold Mech
Engineering Data and Parts List

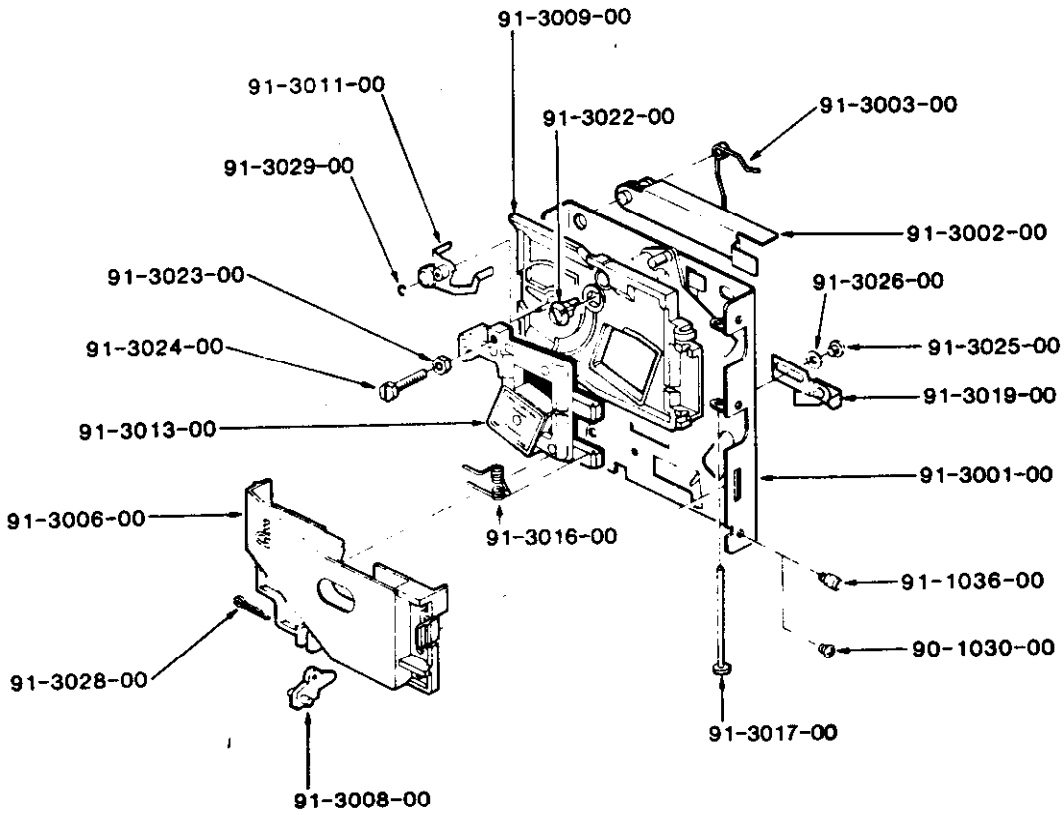

PARTS LIST

90-1030-00	Retaining Screw (#6-32"x.250")	91-3009-00	Gate	91-3023-00	Locknut-Magnet Holder
91-1036-00	Mounting Stud	91-3011-00	Cradle	91-3024-00	Screw-Magnet Holder
91-3001-00	Back Plate	91-3013-00	Magnet Holder with Magnet	91-3025-00	Screw Separator
91-3002-00	Reject Lever	91-3016-00	Gate Spring	91-3026-00	Washer
91-3003-00	Reject Lever Spring	91-3017-00	Gate Pin	91-3028-00	Cotter Pin for Anti-stringing Device
91-3006-00	Cover Plate	91-3019-00	Separator	91-3029-00	E-Clip for Cradle
91-3008-00	Anti-Stringing Device	91-3022-00	Diameter Adjustment		

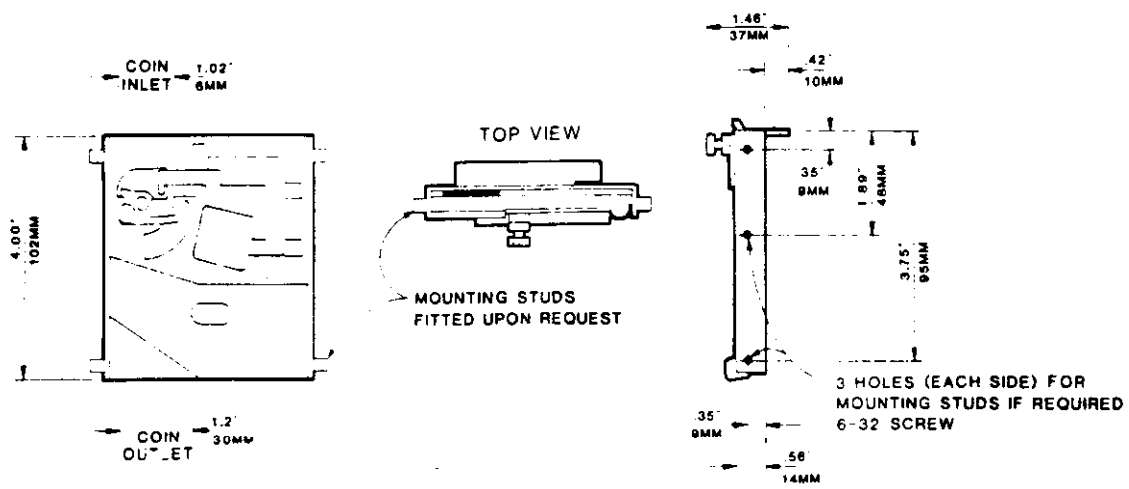

Gold Mech: Service Information

CLEANING and CARE of the MECHANISM

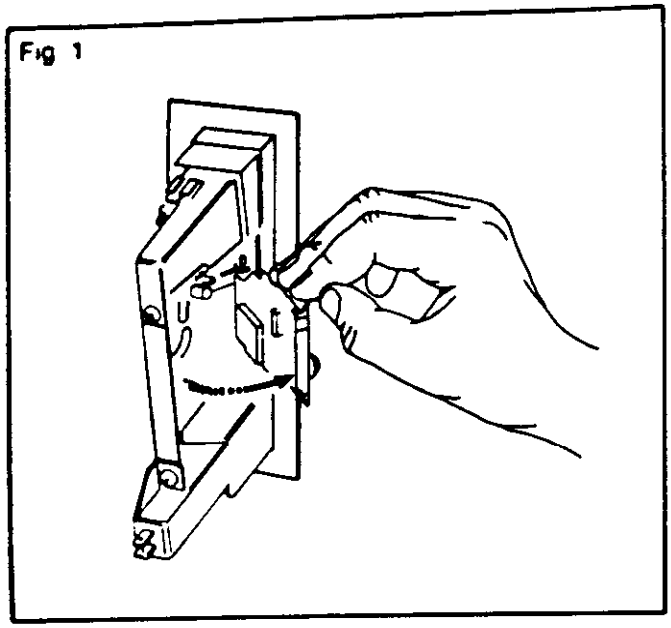

The magnet that is fitted to the mechanism, should be kept clean from foreign particles. The magnet can be cleaned by swinging the gate open. (as shown in Fig. 1.) Remove metal filings from the magnet by guiding the point of a screwdriver along the edges of the magnet, such that the filings cling to the screwdriver.

The mechanism can be cleaned by immersing in water using a small brush to clean the mechanism. Rinse the mechanism with boiling water and dry with compressed air.

Note:
Since the Gold Mech relies on coins passing the magnet at a constant speed, the rejector must be free of dirt and grease which may slow down the coins. Do not lubricate the acceptor with oil as this slows down coins.

If the above procedures are not successful, check for worn, bent or damaged parts and replace where necessary.

Coin Switch

The coin switch comes in two different spring tensions—identified by the color of the plastic boss at the wire's pivot point.

Red: Light tension—U.S. 25¢

White: Heavy tension—heavy foreign coins

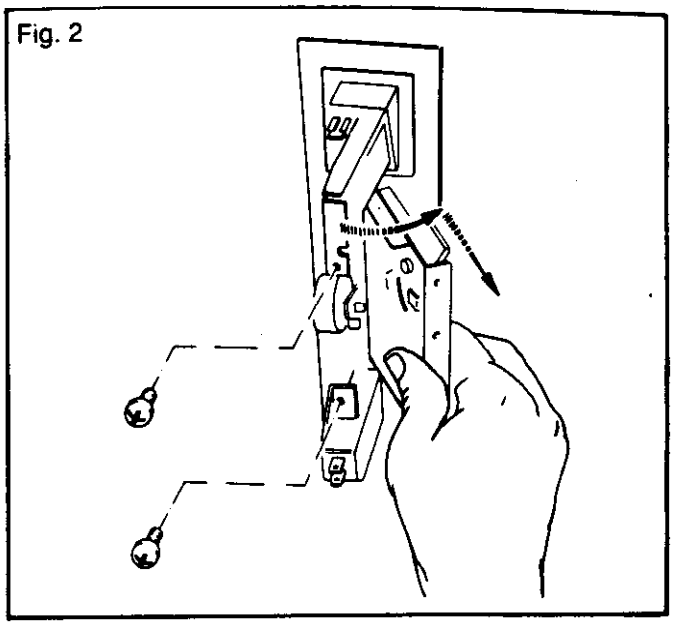

Removal of Mechanism

To remove the coin selector: Unscrew the two screws (as SHOWN IN Fig. 2)—swing rear of selector body away from the lock-out side and withdraw.

The Gold Mech Acceptors are designed to require a minimum of maintenance and field adjustment. Coins are checked by diameter and thickness, weight, metal content, bounce, and for ferromagnetic coins such as nickel and steel, a rim test is also used.

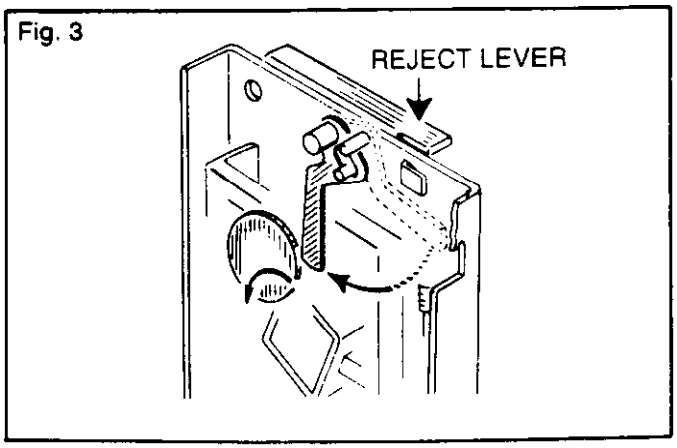

The Magnet

Coins that are too thick will fail to pass between the magnet and the backplate of the mechanism; and will be cleared by the magnet wiper when the reject lever is actuated. (Fig. 3)

Fig. 4

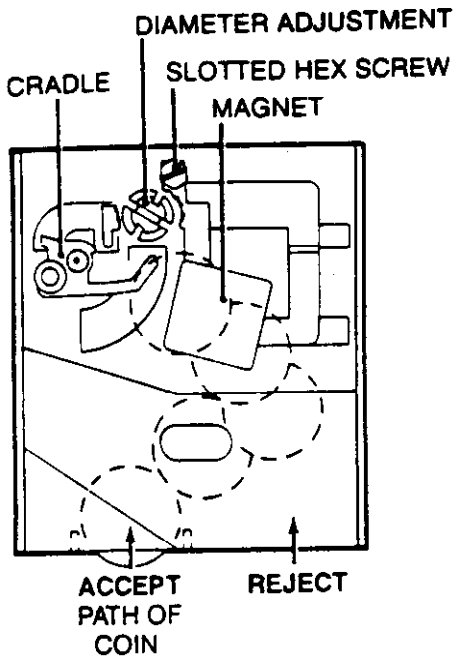

The first check on the coin is at the entry slot which prevents the entry of grossly oversize and bent coins. The next test is at the cradle. When the correct coin falls into the cradle, the cradle tipples and the coin is delivered to the magnet check. Under-diameter coins fall between the legs of the cradle and are returned to reject. Under-weight coins fail to tipple the cradle and can be returned to reject by pressing the reject lever.

Adjustment

The Gold Mech Acceptors are factory adjusted for optimum performance. If more critical adjustments are desired, or if the unit has been disassembled, the following adjustment procedure is suggested. (Fig. 4)

1. Ensure that the mechanism is in an upright and level position.

2. Loosen the hex locking screw on the magnet holder and unscrew the slotted hex screw.

3. Place a true U.S. 25¢ coin in the mechansim. Turn the diameter adjustment (Fig. 4) clockwise until the coin falls into the cradle. The cradle should tipple and the coin come to rest on the side of the magnet. Turn the slotted hex screw clockwise until the coin just clears the magnet. Give this screw a further ½ turn clockwise for optimum clearance and tighten the locknut.

Base Plate Assembly for Coin Doors and Front Plates

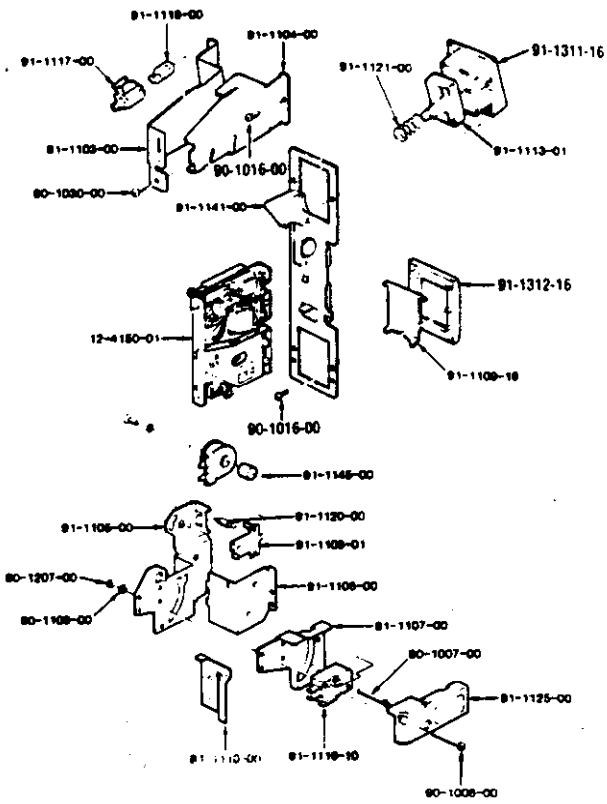

Part Number	Description
12-4150-01	Gold Mech Acceptor
90-1000-00	Keyhook Bezel Screw
90-1007-00	Flat Head Microswitch Mounting Screw
90-1008-00	Pan Head Microswitch Mounting Screw
90-1016-00	CPJS/Bezel Screw
90-1030-00	Mounting Screw for Gold Mech
90-1032-00	Bezel/Hinge Screw PZ
90-1109-00	Lock Washer for Microswitch Assembly
90-1207-00	Nut for Microswitch Mounting Screw
91-1103-00	Coin Inlet Lamp Side
91-1104-00	Coin Inlet Cover Side
91-1105-00	Reject Cup Side Plate
91-1106-00	Reject Cup Base Plate
91-1107-00	Microswitch Bracket
91-1108-00	Lockout Flap U.S. 25¢
91-1109-16	Reject Flap
91-1110-00	Metal Switch Adjuster
91-1113-01	Entry/Reject Button U.S. 25¢
91-1116-10	Microswitch (Red End Arm)
91-1117-00	Lampholder
91-1118-00	GV Wedge Base Lamp
91-1120-00	Lockout Spring
91-1121-00	Button Spring
91-1125-00	Clear Plastic Cover for Microswitch
91-1141-00	Base Plate w/Pivot Coil
91-1145-00	12V DC Lockout Coil
91-1311-16	Black Nylon Button Bezel
91-1312-16	Black Nylon Reject Bezel

USER INFORMATION

WARNING

F.C.C. REGULATION COMPLIANCE

THIS KIT IS INTENDED FOR USE ONLY ON COIN-OPERATED VIDEO GAMES MANUFACTURED AFTER OCTOBER 1, 1983 WHICH HAVE BEEN VERIFIED FOR COMPLIANCE WITH REQUIREMENTS IN PART 15 OF F.C.C. RULES FOR A CLASS A COMPUTING DEVICE.

IMPROPER CONNECTION OF THIS KIT OR CONNECTION TO ANY OTHER GAME NOT SO MANUFACTURED OR VERIFIED FOR COMPLIANCE MAY CAUSE UNACCEPTABLE INTERFERENCE TO RADIO AND T.V. RECEPTION, REQUIRING THE OPERATOR TO TAKE WHATEVER STEPS ARE NECESSARY TO CORRECT THE INTERFERENCE.

THE P.C. BOARD CAGE SUPPLIED WITH THIS CONVERSION KIT MUST BE UTILIZED AND TERMINATED TO GROUND AT THE TIME OF INSTALLATION.

KONAMI®

815 Mittel Drive, Wood Dale, Illinois 60191
Telephone: (312) 595-1443, Telex: 6871385 KONAM UW, Fax: (312) 595-2973

PART # 775400

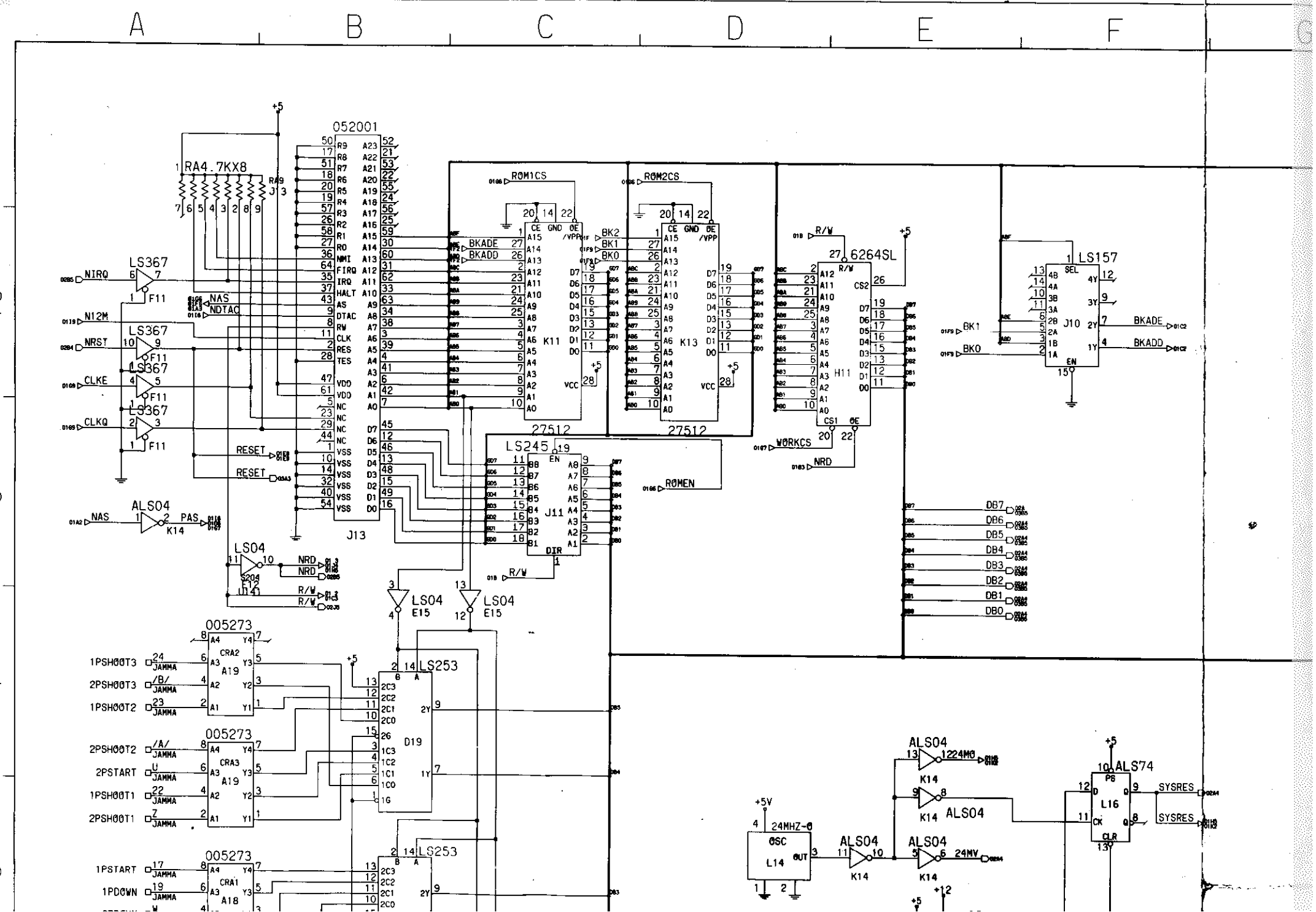
052001
J13
RA4.7KX8
LS367
F11
ALS04
K14
LS04
E15
ROM1CS
ROM2CS
K11
K13
27512
6264SL
H11
LS157
J10
BKADE
BKADD
BK1
BK0
LS245
J11
ROMEN
WORKCS
NRD
R/W
RESET
NAS
NDTAC
PAS
NIRQ
N12M
NRST
CLKE
CLKQ
DB7
DB6
DB5
DB4
DB3
DB2
DB1
DB0
005273
CRA2
CRA3
CRA1
A19
A18
LS253
D19
1PSHOOT3
2PSHOOT3
1PSHOOT2
2PSHOOT2
2PSTART
1PSHOOT1
2PSHOOT1
1PSTART
1PDOWN
24MHZ-0
OSC
L14
1224MO
24MV
ALS74
L16
SYSRES

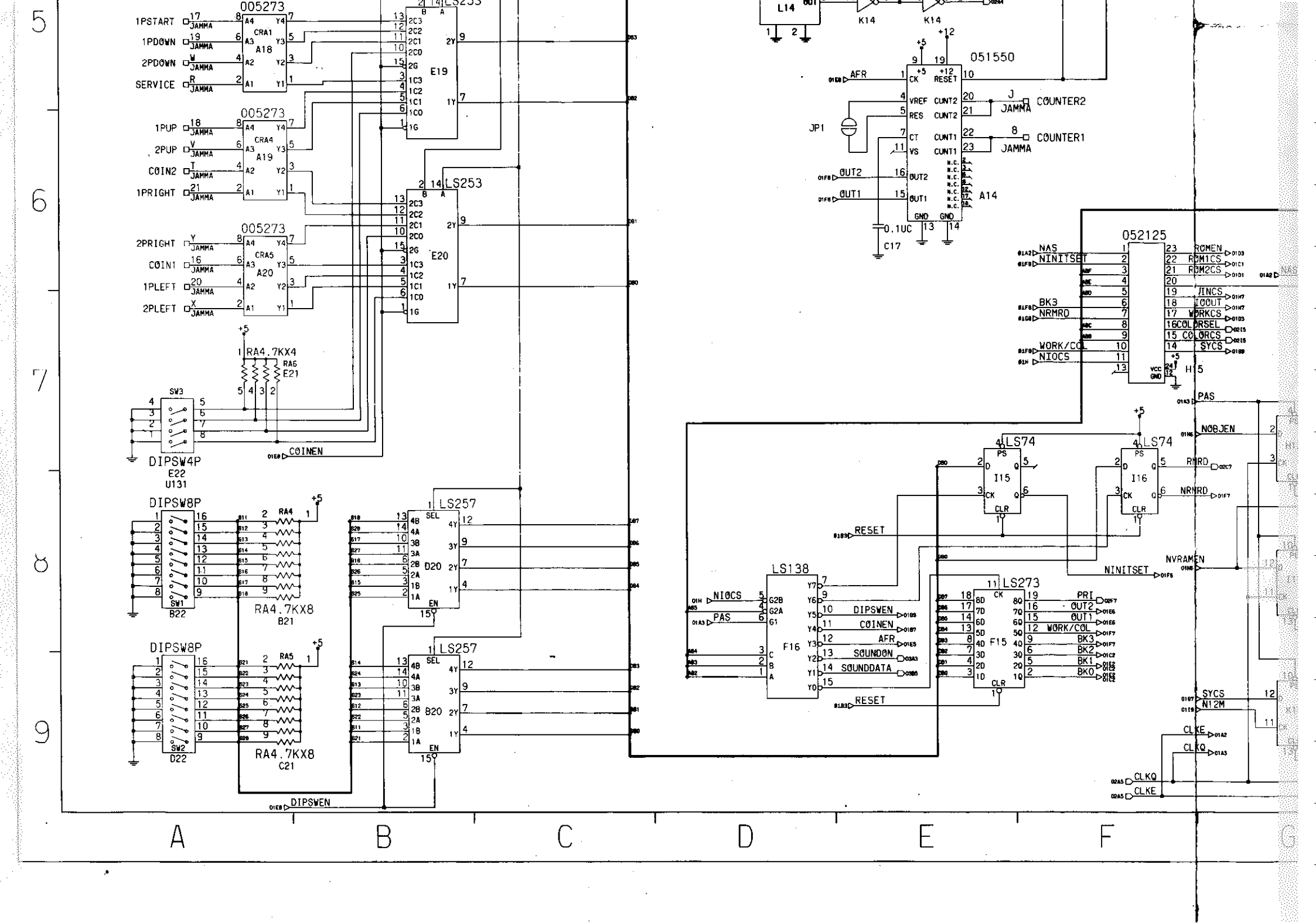
005273
CRA1
A18
1PSTART
1PDOWN
2PDOWN
SERVICE
005273
CRA4
A19
1PUP
2PUP
COIN2
1PRIGHT
005273
CRA5
A20
2PRIGHT
COIN1
1PLEFT
2PLEFT
JAMMA
LS253
E19
LS253
E20
RA4.7KX4
RA6
E21
SW3
DIPSW4P
E22
U131
COINEN
DIPSW8P
SW1
B22
RA4
RA4.7KX8
B21
DIPSW8P
SW2
D22
RA5
RA4.7KX8
C21
LS257
D20
LS257
B20
DIPSWEN
L14
K14
K14
051550
AFR
JP1
COUNTER2
COUNTER1
OUT2
OUT1
0.1UC
C17
A14
052125
NAS
NINITSET
BK3
NRMRD
WORK/COL
NIOCS
ROMEN
ROM1CS
ROM2CS
JINCS
IOOUT
WORKCS
COLORSEL
COLORCS
SYCS
H15
PAS
NOBJEN
LS74
I15
LS74
I16
RMRD
NRMRD
RESET
NVRAMEN
NINITSET
LS138
F16
NIOCS
PAS
DIPSWEN
COINEN
AFR
SOUNDON
SOUNDDATA
RESET
LS273
F15
PRI
OUT2
OUT1
WORK/COL
BK3
BK2
BK1
BK0
SYCS
N12M
CLKE
CLKQ
CLKQ
CLKE
A
B
C
D
E
F
5
6
7
8
9

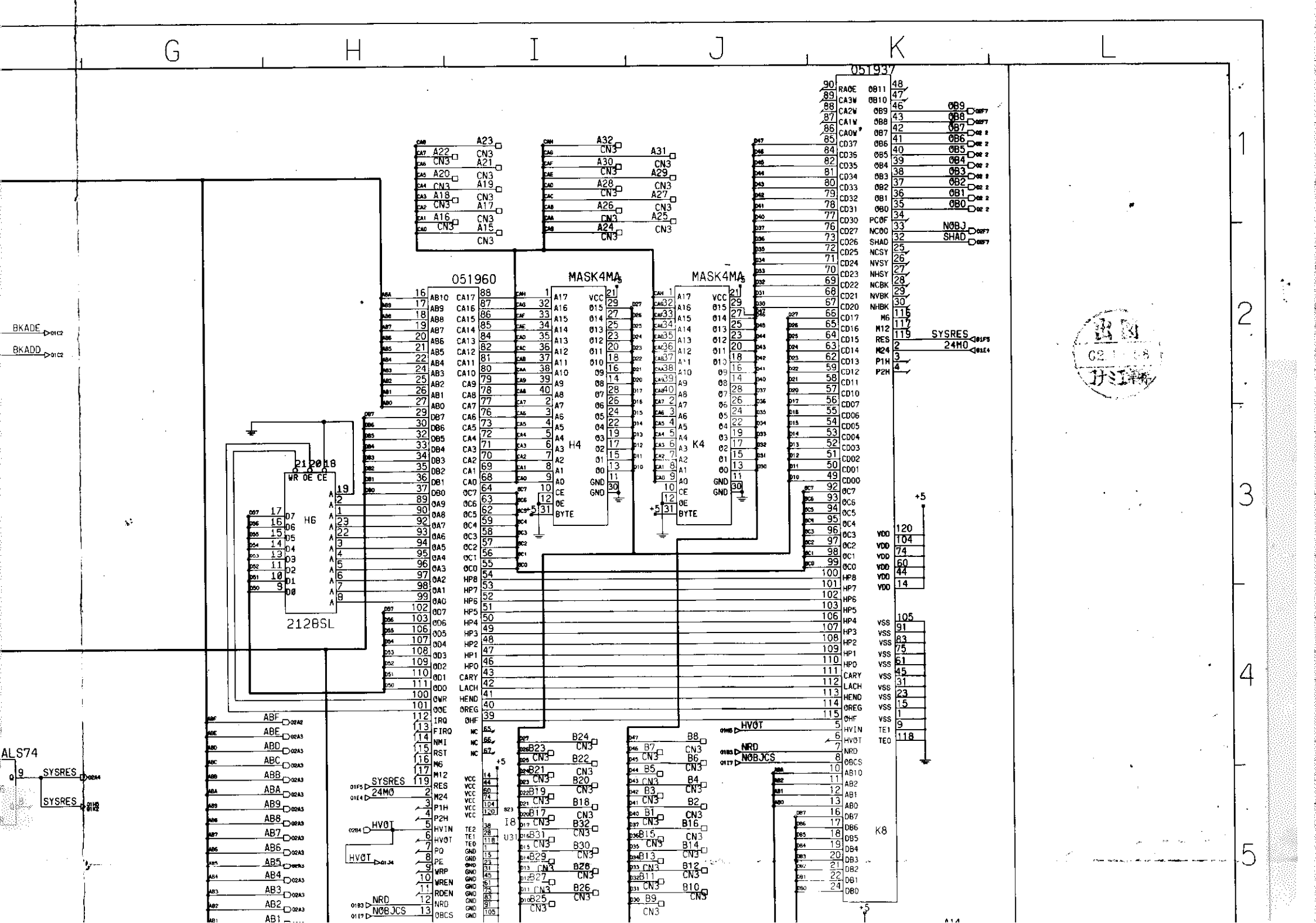
G
H
I
J
K
L
1
2
3
4
5
051937
K8
051960
I8
U31
MASK4MA
H4
K4
212BSL
H6
ALS74
BKADE
BKADD
SYSRES
24M0
HVOT
NRD
NOBJCS
NOBJ
SHAD
A22
A21
A20
A19
A18
A17
A16
A15
A32
A31
A30
A29
A28
A27
A26
A25
A24
CN3
+5

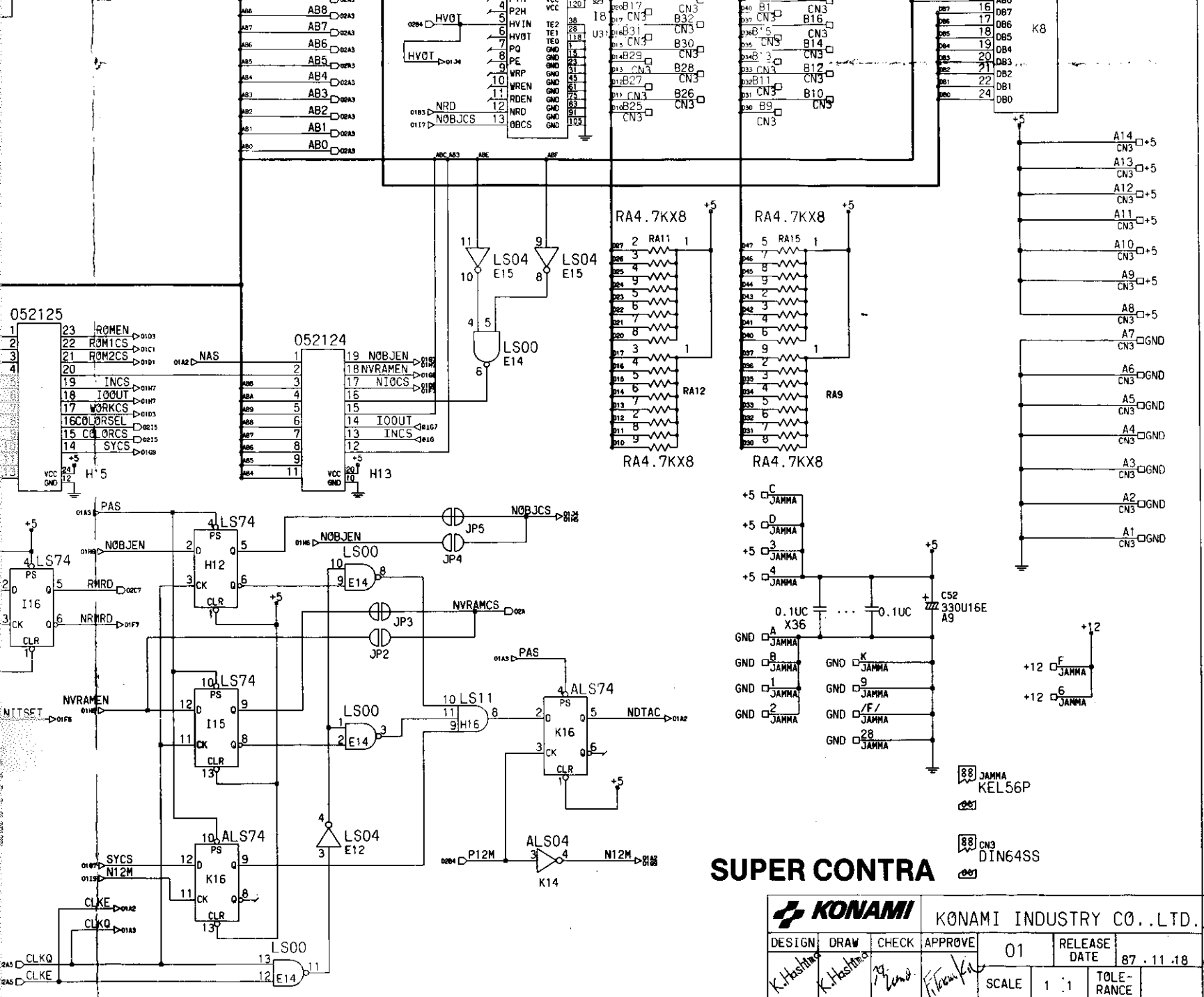

-NOTE-

KINDS OF CAPACITOR
T:TANTALUM
M:MYLAR
E:ELECTROLYTIC
NOMARK:CERAMIC

+5 :VCC(5V)
+12 :VCC(12V)
⏚ :GND

JAMMA JAMMA EDGE 56PIN

CN3 CN3:64PIN DIN CONNECTOR SOCKET
→ :ON PAGE SIGNAL
→ :OFF PAGE SIGNAL

PIN NO.
NUMBER:PARTS SIDE
ALPHABET:SOLDER SIDE
/A/ A SMALL LETTER

KONAMI	KONAMI INDUSTRY CO..LTD.					REG.TYPE	SCHMATIC DIAGRAM
DESIGN	DRAW	CHECK	APPROVE	01	RELEASE DATE 87.11.18	NAME	GX775 PWB350794A
K.Hashimo	K.Hashimo			SCALE 1:1	TOLERANCE	CODE NO.	100082 1/3

G H I J K L

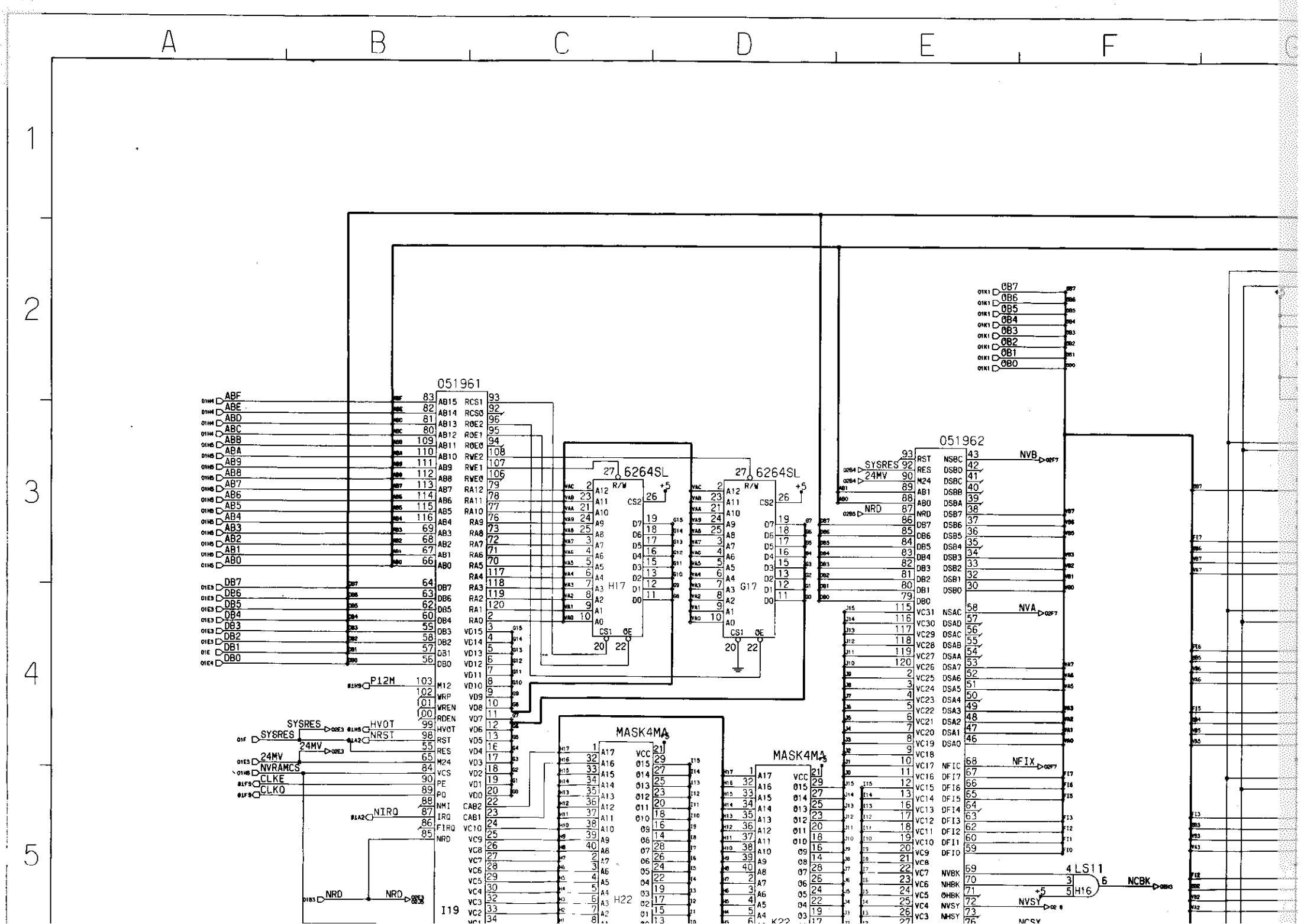
A
B
C
D
E
F
1
2
3
4
5
051961
051962
6264SL
6264SL
MASK4MA
MASK4MA
H17
G17
H22
I19
4 LS11
H16
ABF
ABE
ABD
ABC
ABB
ABA
AB9
AB8
AB7
AB6
AB5
AB4
AB3
AB2
AB1
AB0
DB7
DB6
DB5
DB4
DB3
DB2
DB1
DB0
P12M
SYSRES
HVOT
NRST
24MV
NVRAMCS
CLKE
CLKQ
NIRQ
NRD
0B7
0B6
0B5
0B4
0B3
0B2
0B1
0B0
NVB
NVA
NFIX
NCBK
NVSY
NCSY

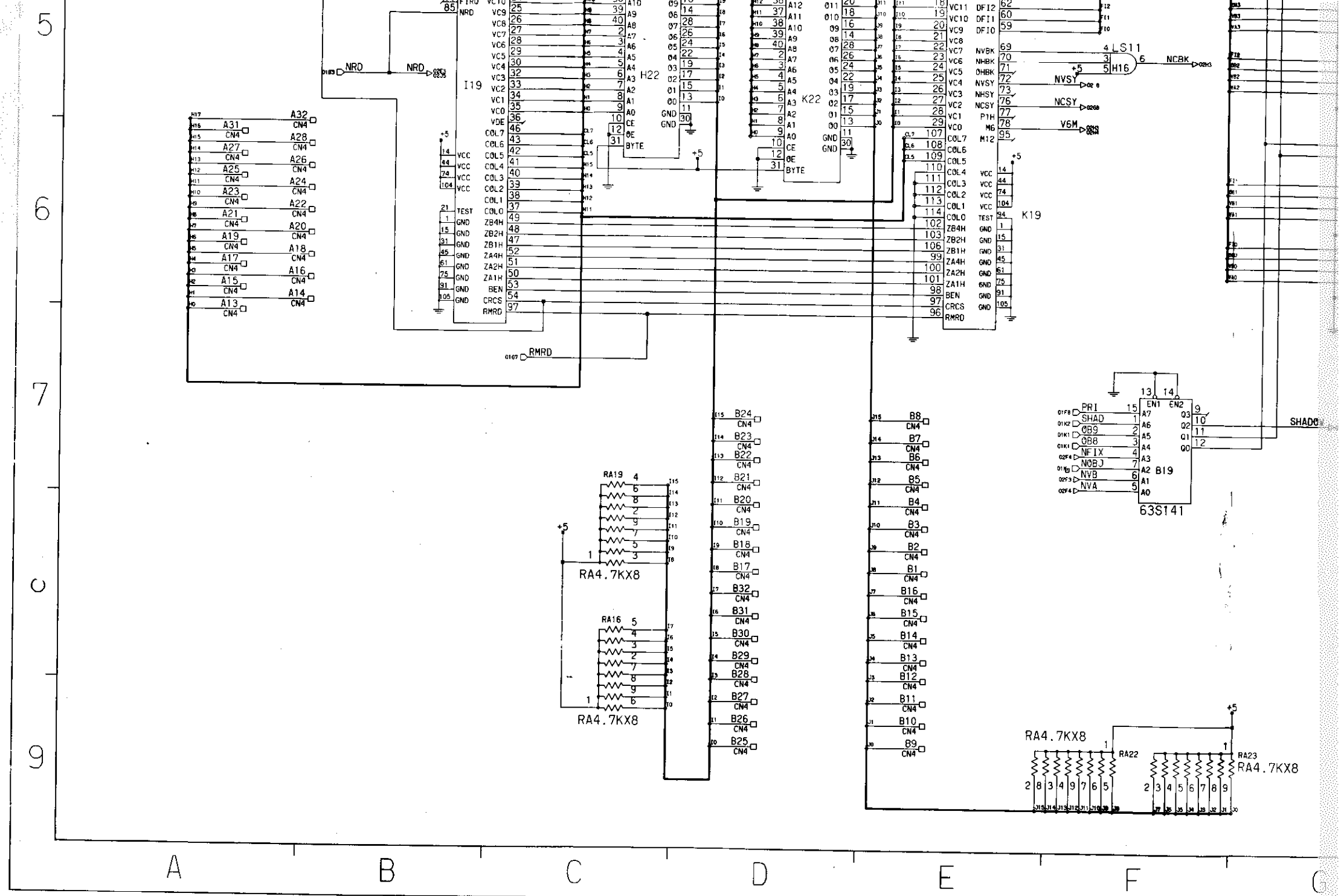
I19
H22
K22
K19
LS11
H16
NRD
RMRD
NCBK
NVSY
NCSY
V6M
SHADO
PRI
SHAD
ØB9
ØB8
NFIX
NØBJ
NVB
NVA
B19
63S141
RA19
RA4.7KX8
RA16
RA4.7KX8
RA22
RA23
RA4.7KX8
A
B
C
D
E
F
G

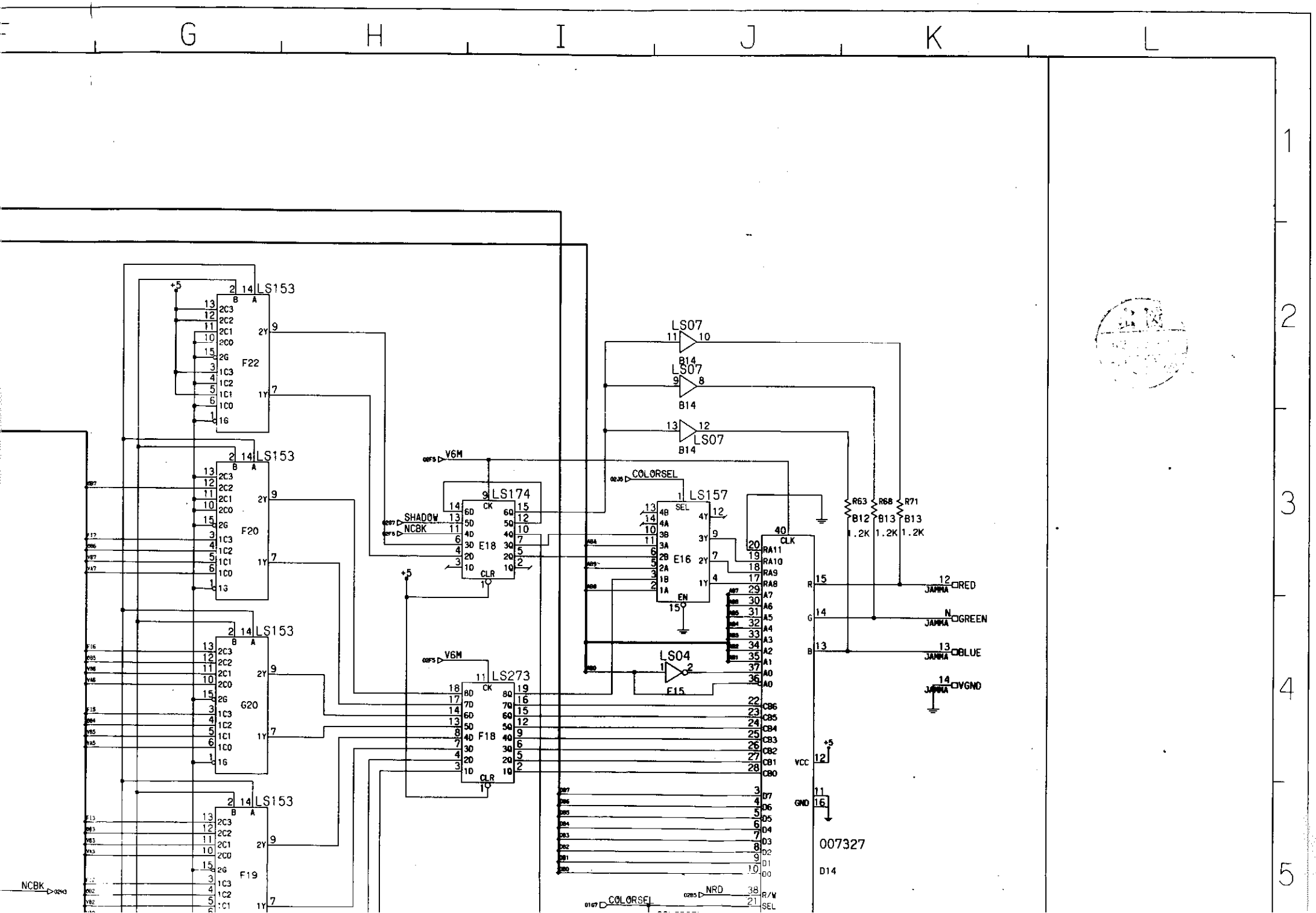
G
H
I
J
K
L
1
2
3
4
5
LS153
F22
F20
G20
F19
LS174
E18
LS273
F18
LS157
E16
LS07
B14
LS04
F15
R63
R68
R71
B12
B13
1.2K
SHADOW
NCBK
V6M
COLORSEL
NRD
CLK
VCC
GND
RED
GREEN
BLUE
VGND
007327
D14

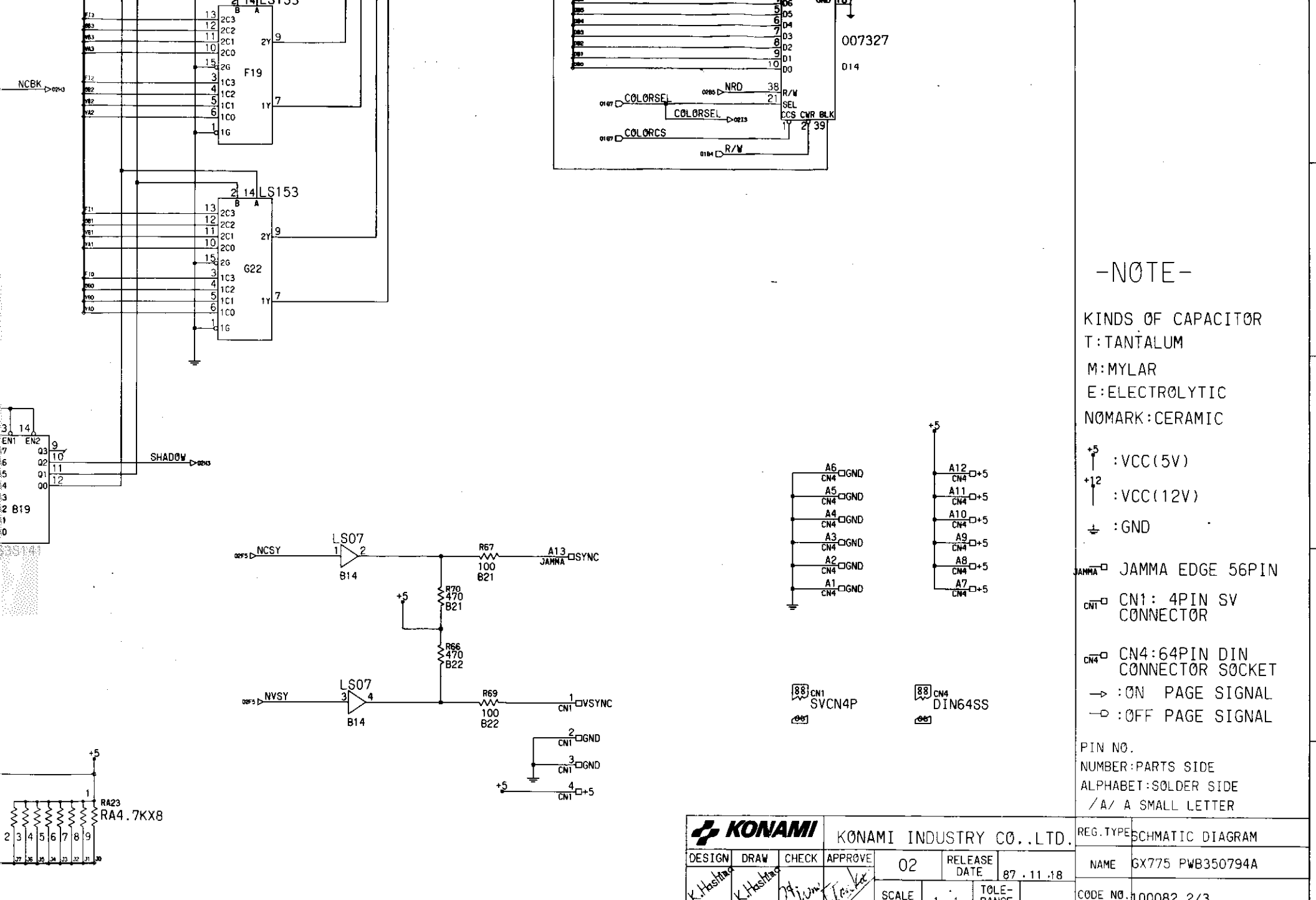
LS153
F19
G22
NCBK
SHADOW
B19
007327
D14
COLORSEL
COLORCS
NRD
R/W
LS07
B14
NCSY
NVSY
R67
100
B21
R69
100
B22
R70
470
B21
R66
470
B22
A13
JAMMA
SYNC
VSYNC
GND
RA23
RA4.7KX8
SVCN4P
DIN64SS
-NOTE-
KINDS OF CAPACITOR
T:TANTALUM
M:MYLAR
E:ELECTROLYTIC
NOMARK:CERAMIC
:VCC(5V)
:VCC(12V)
:GND
JAMMA EDGE 56PIN
CN1: 4PIN SV CONNECTOR
CN4:64PIN DIN CONNECTOR SOCKET
:ON PAGE SIGNAL
:OFF PAGE SIGNAL
PIN NO.
NUMBER:PARTS SIDE
ALPHABET:SOLDER SIDE
/A/ A SMALL LETTER
KONAMI
KONAMI INDUSTRY CO..LTD.
DESIGN
DRAW
CHECK
APPROVE
02
RELEASE DATE
87.11.18
SCALE
1 : 1
TOLERANCE
REG.TYPE
SCHMATIC DIAGRAM
NAME
GX775 PWB350794A
CODE NO.
100082 2/3

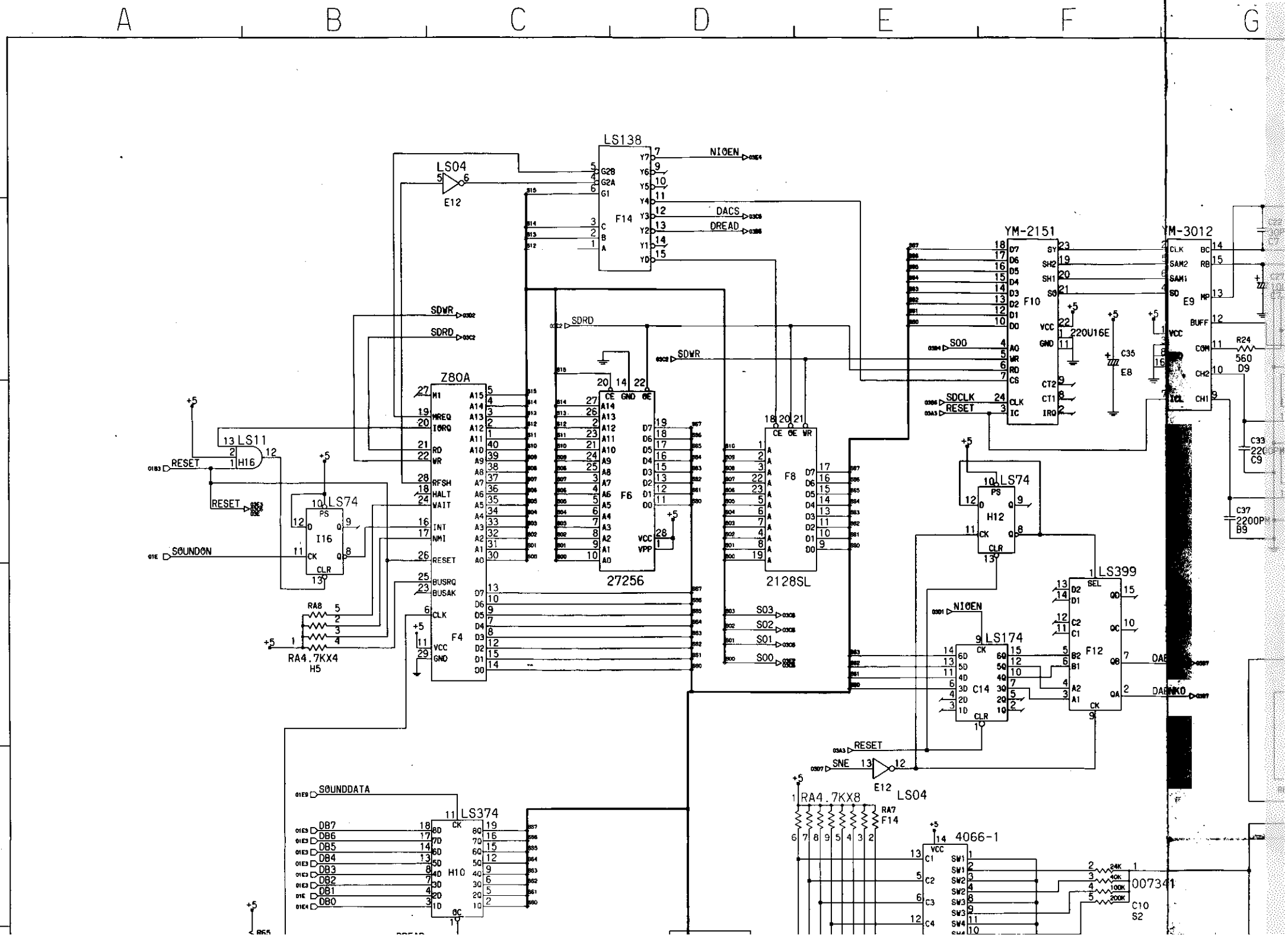
A
B
C
D
E
F
G
1
2
3
4
5
LS138
F14
NIØEN
DACS
DREAD
LS04
E12
YM-2151
F10
220U16E
C35
E8
YM-3012
E9
R24
560
D9
C33
C9
C37
2200P
B9
SDWR
SDRD
Z80A
F4
LS11
H16
RESET
LS74
I16
SØUNDØN
RA8
RA4.7KX4
H5
27256
F6
2128SL
F8
SDCLK
S00
S03
S02
S01
H12
LS399
F12
LS174
C14
SNE
RA4.7KX8
RA7
F14
4066-1
007341
C10
S2
SØUNDDATA
LS374
H10
DB7
DB6
DB5
DB4
DB3
DB2
DB1
DB0

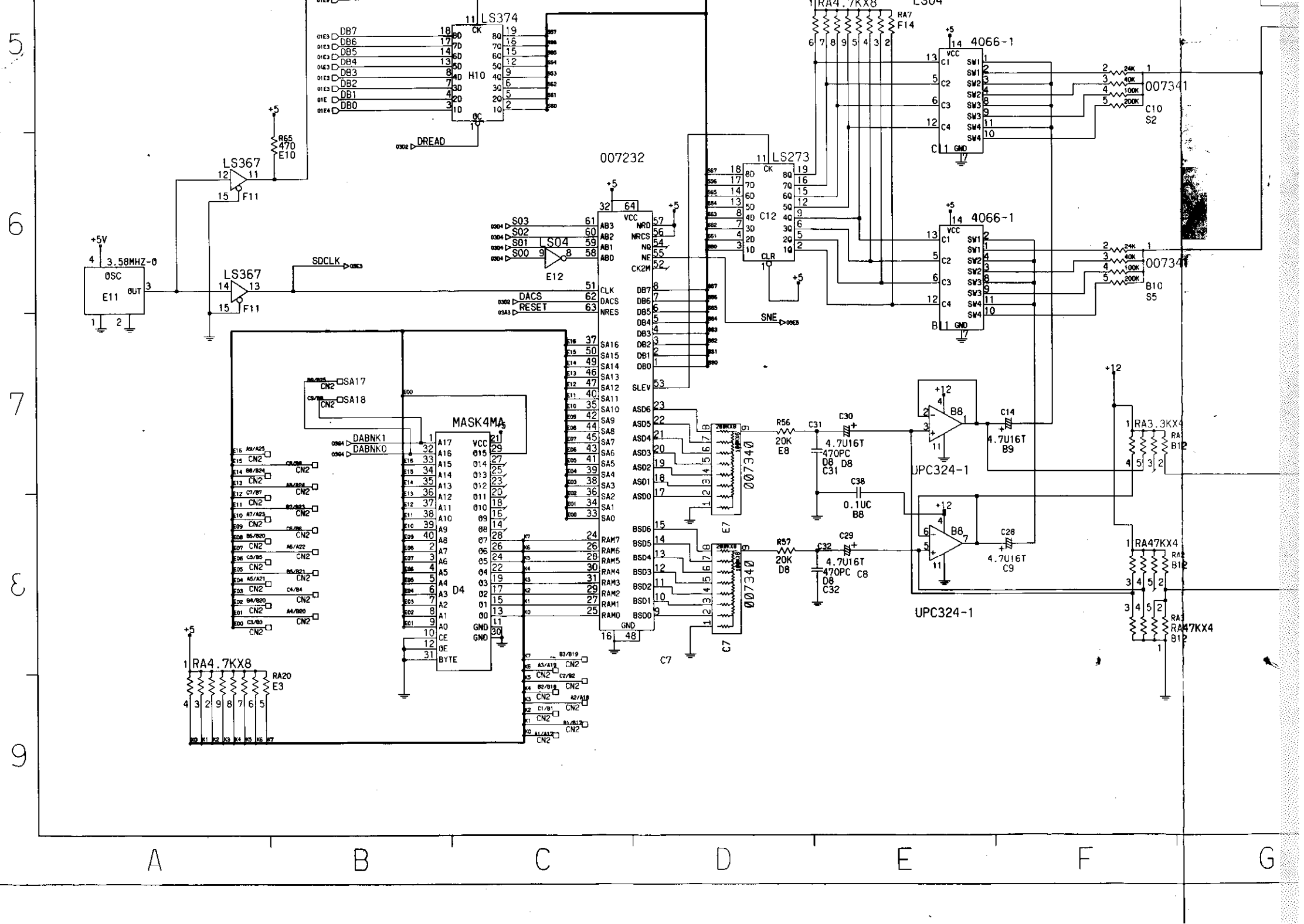
LS374
H10
DB7
DB6
DB5
DB4
DB3
DB2
DB1
DB0
DREAD
R65
470
E10
LS367
F11
3.58MHZ-0
OSC
E11
SDCLK
007232
S03
S02
S01
S00
S04
E12
DACS
RESET
SA17
SA18
DABNK1
DABNK0
MASK4MA
D4
RA4.7KX8
RA20
E3
LS273
C12
CLR
SNE
007340
E7
C7
R56
20K
E8
C30
4.7U16T
470PC
D8
C31
C38
0.1UC
B8
R57
20K
D8
C29
C32
4.7U16T
470PC
C8
D8
C32
UPC324-1
B8
C14
4.7U16T
B9
C28
4.7U16T
C9
RA3.3KX4
RA47KX4
B12
4066-1
007341
C10
S2
B10
S5
RA4.7KX8
RA7
F14

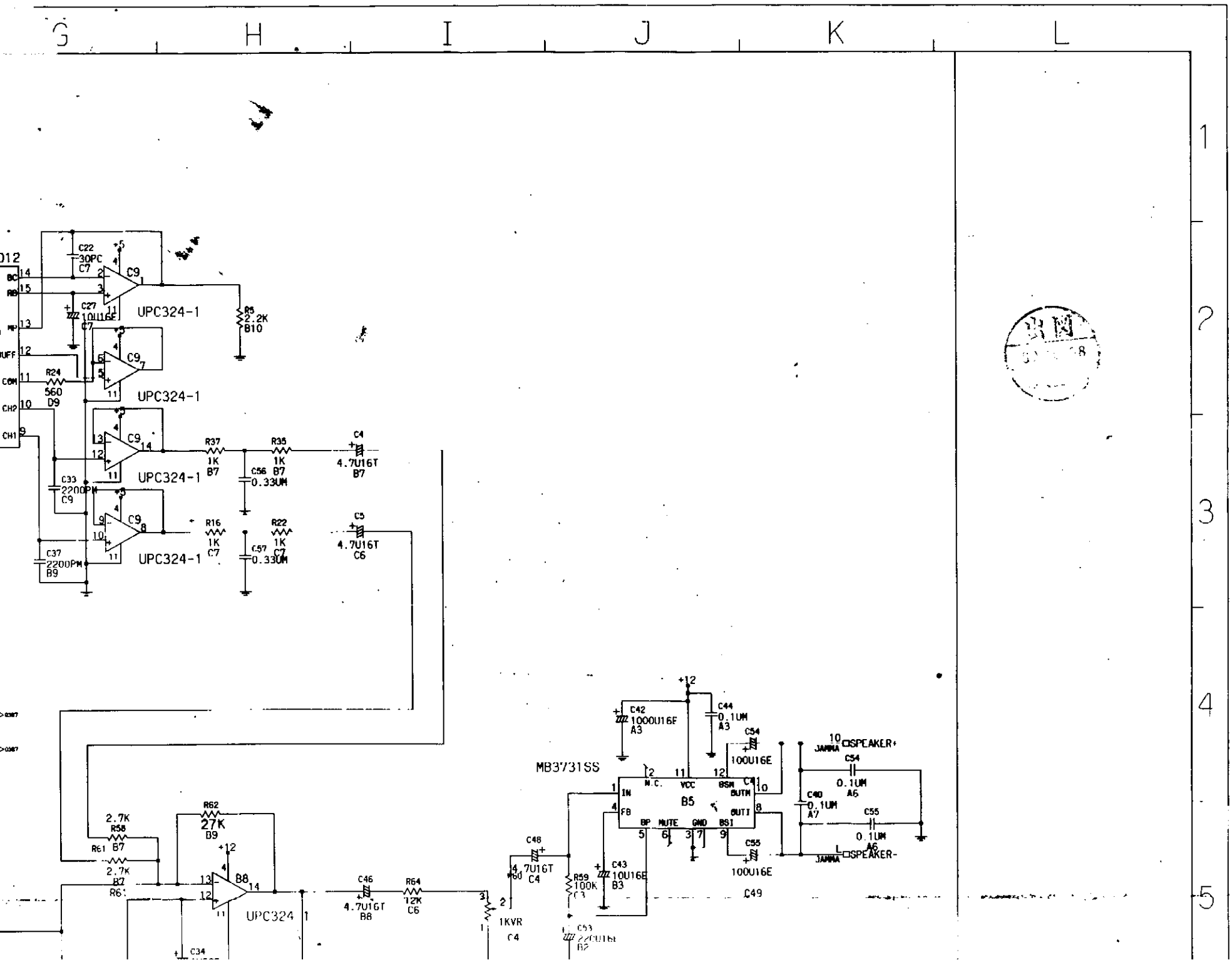
G H I J K L
1 2 3 4 5
012
C22 30PC C7
C27 10U16E C7
C9
UPC324-1
R5 2.2K B10
R24 560 D9
R37 1K B7
R35 1K B7
C4 4.7U16T B7
C56 0.33UM
C33 2200PM C9
C37 2200PM B9
R16 1K C7
R22 1K C7
C5 4.7U16T C6
C57 0.33UM
+12
C42 1000U16F A3
C44 0.1UM A3
C54 100U16E
MB3731SS
N.C. VCC BSM BUTM BUTI
IN FB BP MUTE GND BSI
B5
C40 0.1UM A7
C54 0.1UM A6
C55 0.1UM A6
C55 100U16E
C49
SPEAKER+
SPEAKER-
JAMMA
C48 4.7U16T C4
R59 100K C3
C43 10U16E B3
C53 220U16E B2
2.7K R58 B7
R61 2.7K B7
R62 27K B9
B8
UPC324
C46 4.7U16T B8
R64 12K C6
1KVR C4
C34

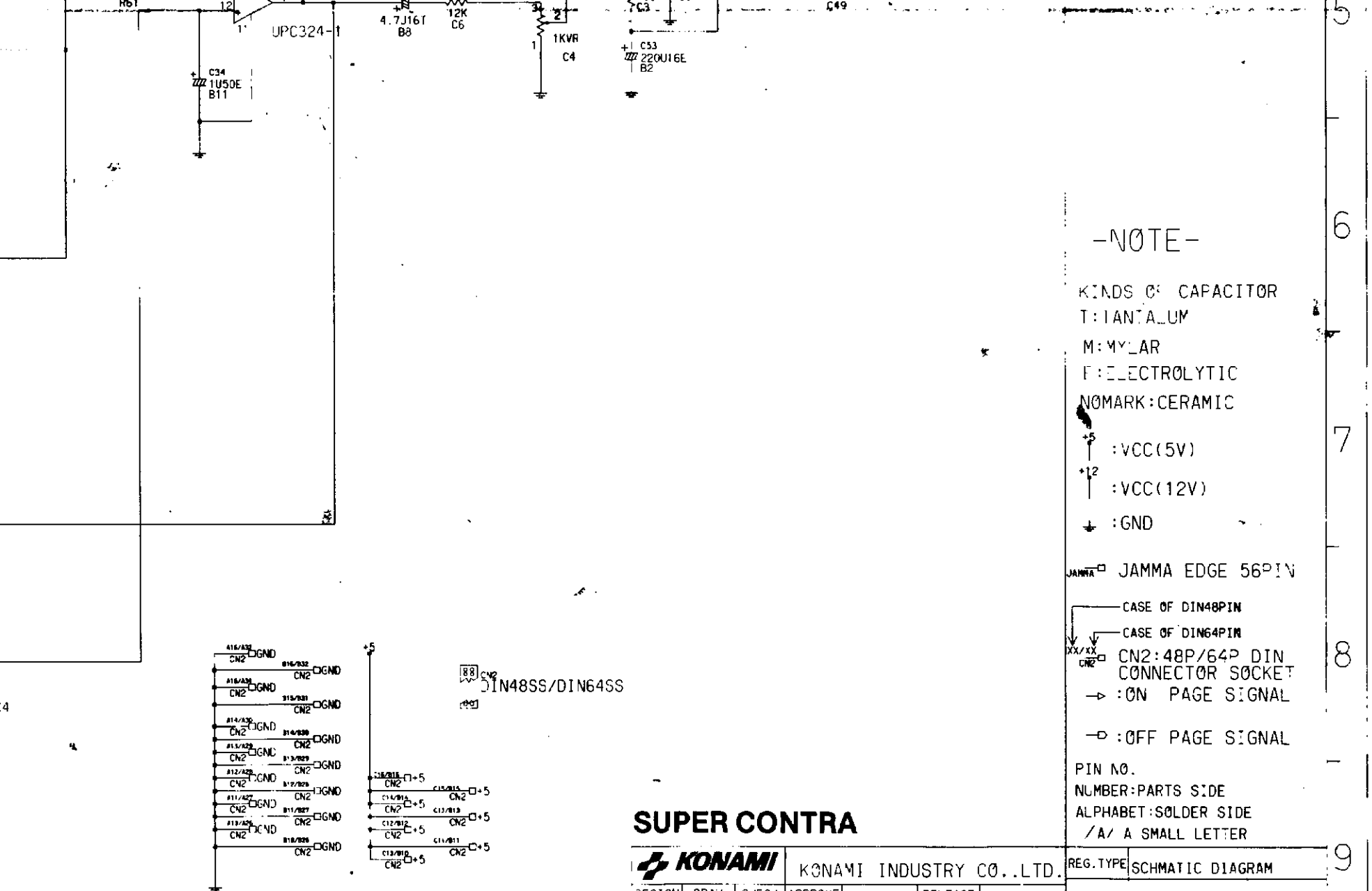

-NOTE-

KINDS OF CAPACITOR
T:TANTALUM
M:MYLAR
E:ELECTROLYTIC
NOMARK:CERAMIC

+5 :VCC(5V)

+12 :VCC(12V)

:GND

JAMMA JAMMA EDGE 56PIN

CASE OF DIN48PIN
CASE OF DIN64PIN
XX/XX CN2 CN2:48P/64P DIN CONNECTOR SOCKET

:ON PAGE SIGNAL

:OFF PAGE SIGNAL

PIN NO.
NUMBER:PARTS SIDE
ALPHABET:SOLDER SIDE
/A/ A SMALL LETTER

SUPER CONTRA

KONAMI	KONAMI INDUSTRY CO.,LTD.					REG.TYPE	SCHMATIC DIAGRAM
DESIGN	DRAW	CHECK	APPROVE	03	RELEASE DATE	87.11.18	NAME GX775 PWB350794A
K.Hashimoto	K.Hashimoto			SCALE	1 : 1	TOLE-RANCE	CODE NO. 100082 3/3

G H I J K L

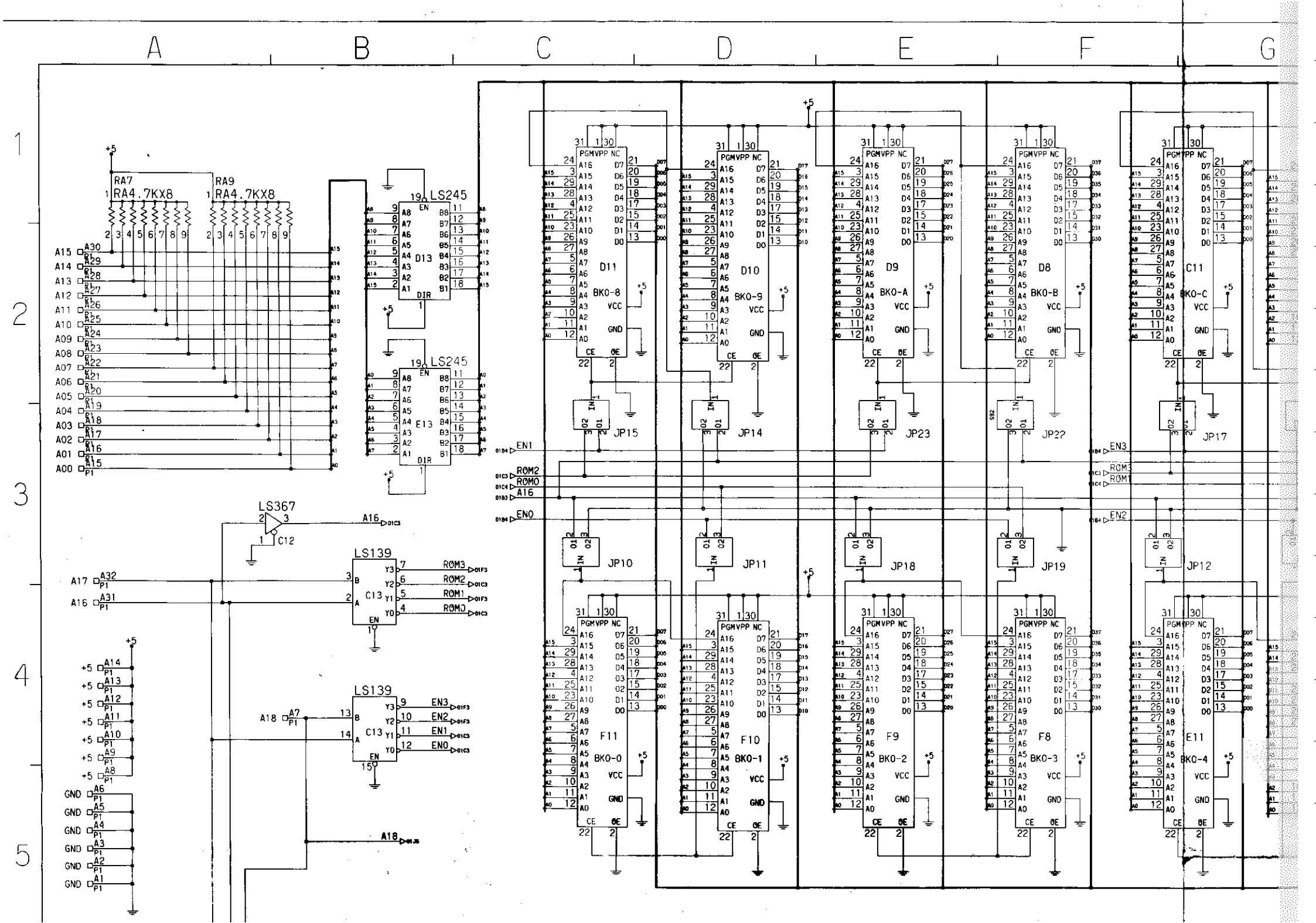
A
B
C
D
E
F
G
1
2
3
4
5
RA7
RA4.7KX8
RA9
RA4.7KX8
LS245
D13
E13
LS367
C12
LS139
C13
D11
D10
D9
D8
C11
F11
F10
F9
F8
E11
BKO-8
BKO-9
BKO-A
BKO-B
BKO-C
BKO-0
BKO-1
BKO-2
BKO-3
BKO-4
PGMVPP NC
JP15
JP14
JP23
JP22
JP17
JP10
JP11
JP18
JP19
JP12
EN1
ROM2
ROM0
A16
EN0
EN3
ROM3
ROM1
EN2
ROM3
ROM2
ROM1
ROM0
EN3
EN2
EN1
EN0
A18
A17
A16
A18
GND

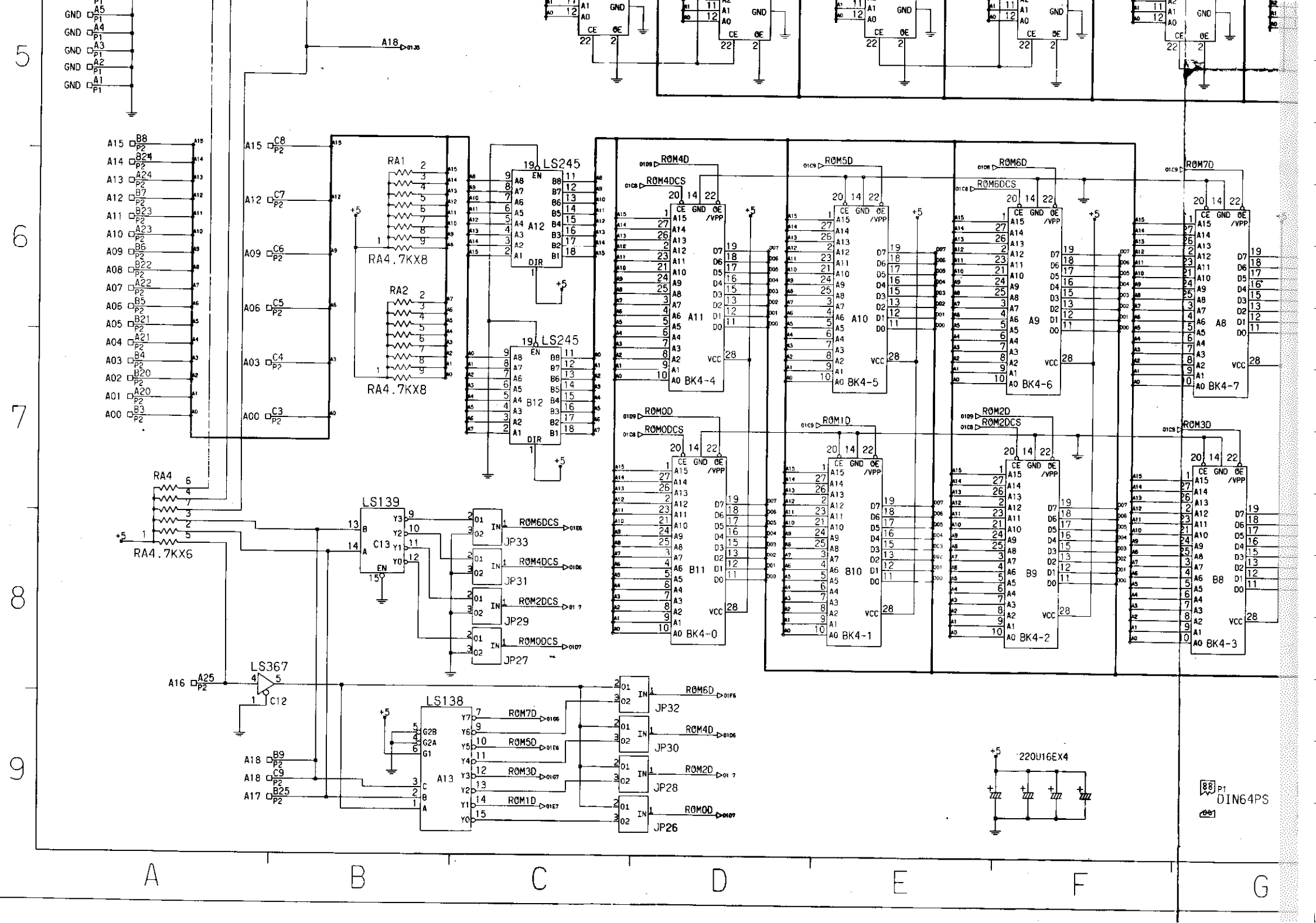
A18
A15
A14
A13
A12
A11
A10
A09
A08
A07
A06
A05
A04
A03
A02
A01
A00
GND
RA1
RA4.7KX8
RA2
RA4.7KX8
RA4
RA4.7KX6
LS245
A12
B12
LS139
C13
LS367
C12
LS138
A13
JP33
JP31
JP29
JP27
JP32
JP30
JP28
JP26
RØM6DCS
RØM4DCS
RØM2DCS
RØMØDCS
RØM7D
RØM5D
RØM3D
RØM1D
RØM6D
RØM4D
RØM2D
RØMØD
A16
A17
A25
B25
B9
C9
C8
C7
C6
C5
C4
C3
+5
RØM4D
RØM4DCS
RØM5D
RØM6D
RØM6DCS
RØM7D
RØMØD
RØMØDCS
RØM1D
RØM2D
RØM2DCS
RØM3D
A11
BK4-4
A10
BK4-5
A9
BK4-6
A8
BK4-7
B11
BK4-0
B10
BK4-1
B9
BK4-2
B8
BK4-3
CE
GND
ØE
/VPP
VCC
220U16EX4
P1
DIN64PS
A
B
C
D
E
F
G

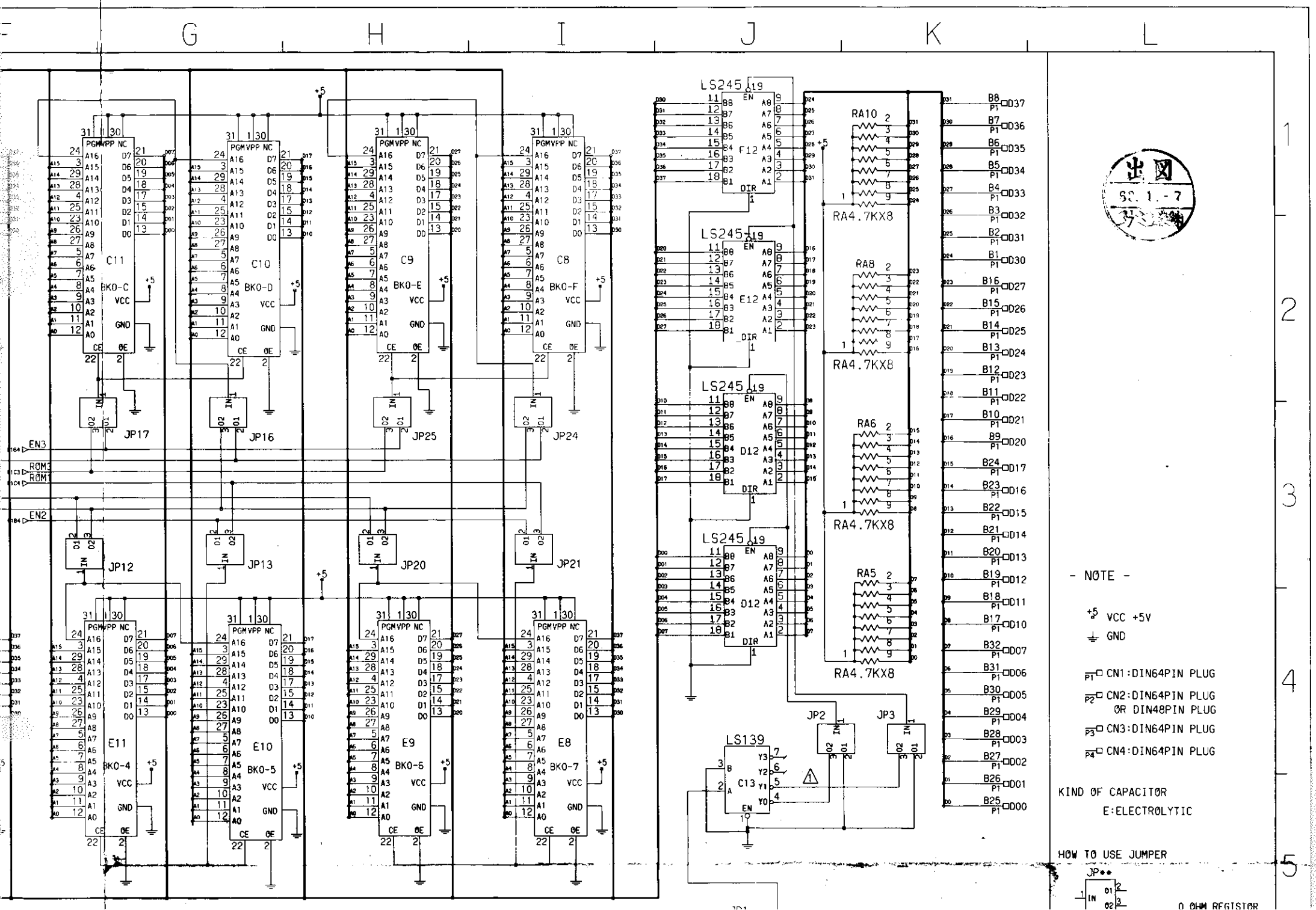
F G H I J K L
1 2 3 4 5
C11 BKO-C
C10 BKO-D
C9 BKO-E
C8 BKO-F
E11 BKO-4
E10 BKO-5
E9 BKO-6
E8 BKO-7
PGMVPP NC
VCC
GND
CE OE
JP17
JP16
JP25
JP24
JP12
JP13
JP20
JP21
EN3
ROM3
ROM1
EN2
LS245 F12
LS245 E12
LS245 D12
LS245 D12
LS139 C13
JP2
JP3
RA10
RA8
RA6
RA5
RA4.7KX8
B8 P1 D37
B7 P1 D36
B6 P1 D35
B5 P1 D34
B4 P1 D33
B3 P1 D32
B2 P1 D31
B1 P1 D30
B16 P1 D27
B15 P1 D26
B14 P1 D25
B13 P1 D24
B12 P1 D23
B11 P1 D22
B10 P1 D21
B9 P1 D20
B24 P1 D17
B23 P1 D16
B22 P1 D15
B21 P1 D14
B20 P1 D13
B19 P1 D12
B18 P1 D11
B17 P1 D10
B32 P1 D07
B31 P1 D06
B30 P1 D05
B29 P1 D04
B28 P1 D03
B27 P1 D02
B26 P1 D01
B25 P1 D00
- NOTE -
VCC +5V
GND
P1 CN1:DIN64PIN PLUG
P2 CN2:DIN64PIN PLUG
OR DIN48PIN PLUG
P3 CN3:DIN64PIN PLUG
P4 CN4:DIN64PIN PLUG
KIND OF CAPACITOR
E:ELECTROLYTIC
HOW TO USE JUMPER
JP**
0 OHM REGISIOR

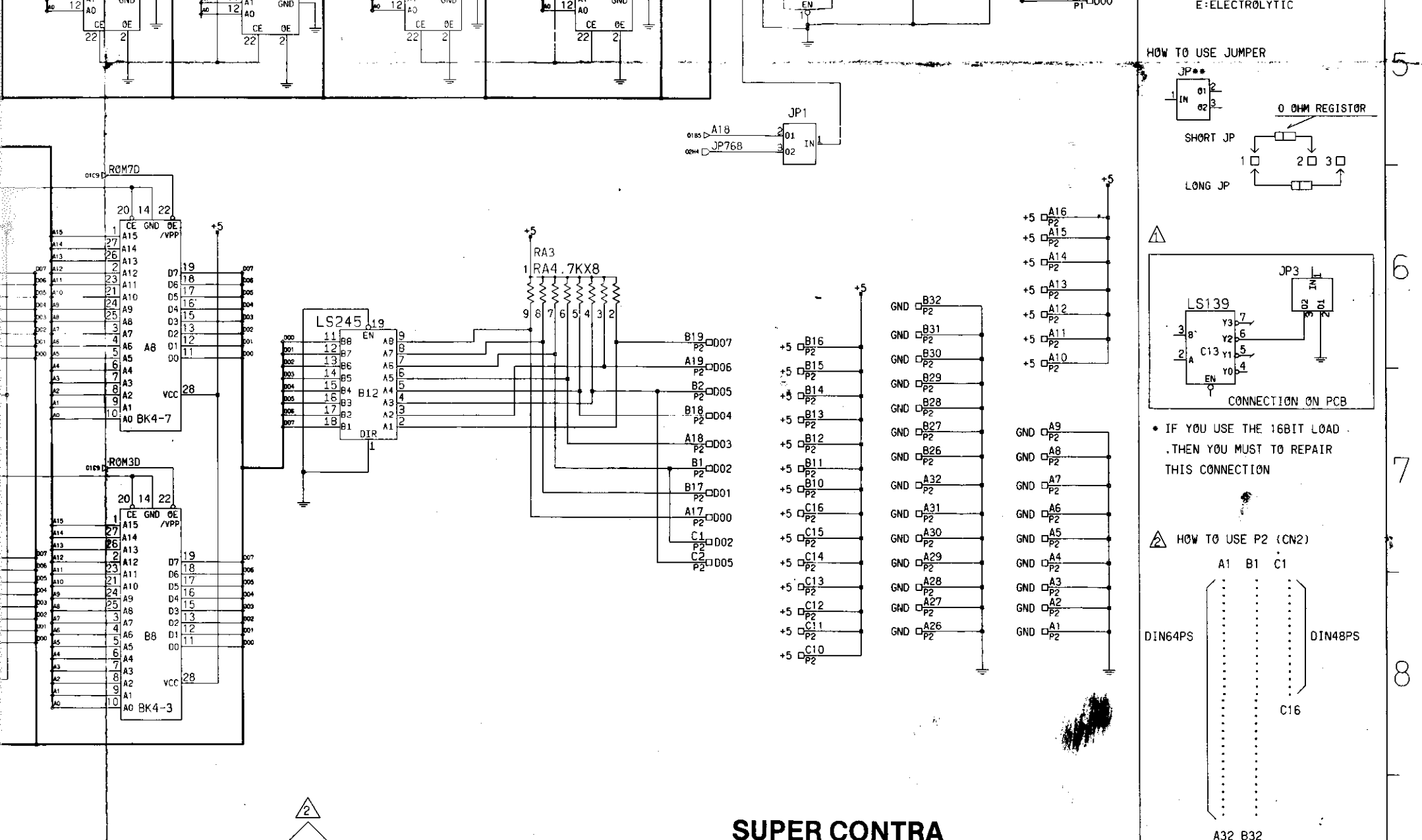

SUPER CONTRA

KONAMI	KONAMI INDUSTRY CO..LTD.							REG.TYPE	SCHEMATIC DIAGRAM
DESIGN	DRAW	CHECK	APPROVE		RELEASE DATE			NAME	ROM BOARD 34M PWB350958
S. YASUDA	T. MATSUURA			SCALE	1 : 1	TOLE-RANCE	A1	CODE NO.	100087 1/2

G H I J K L

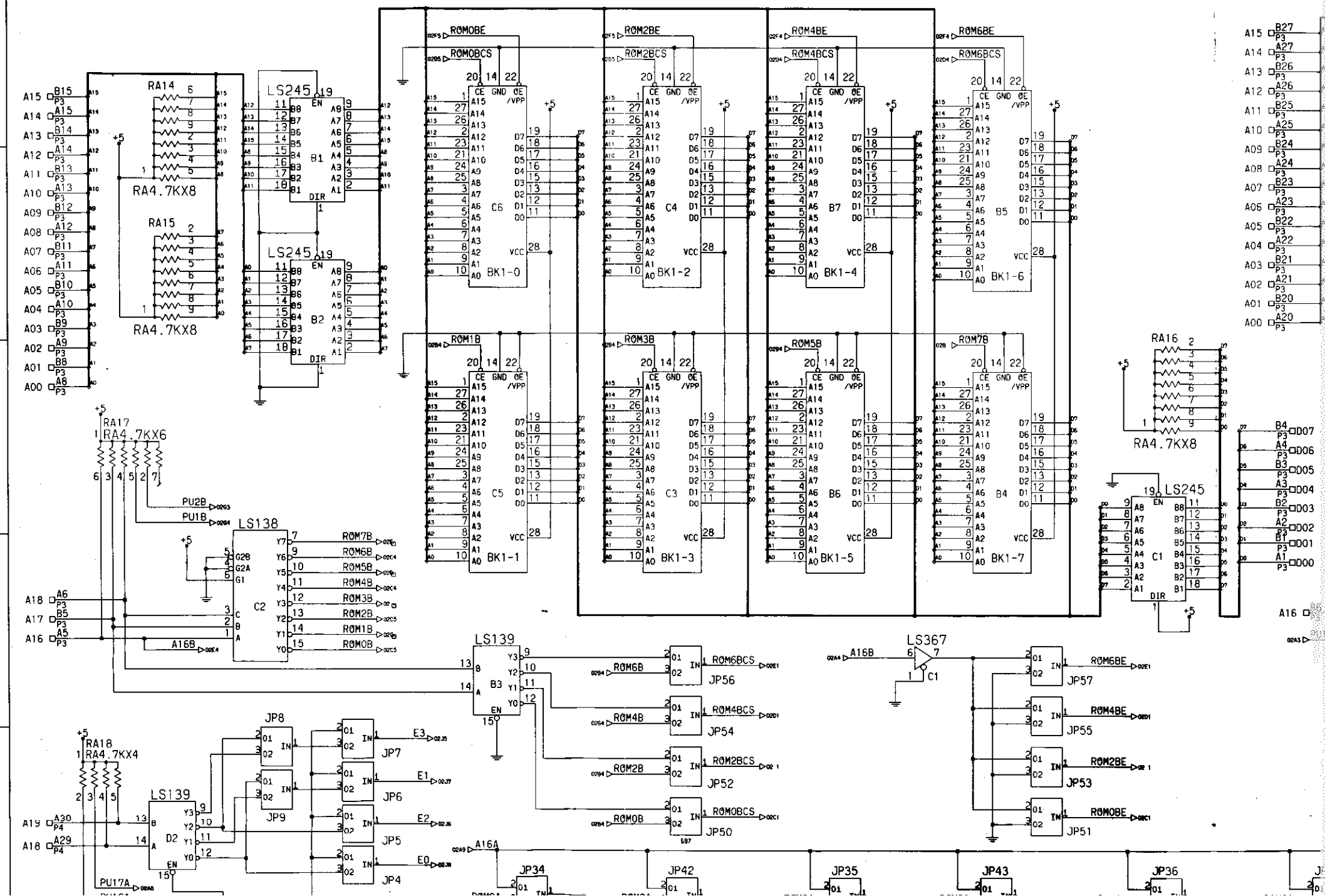
A B C D E F
1 2 3 4 5
RA14
RA4.7KX8
RA15
RA4.7KX8
LS245
B1
B2
DIR
EN
RA17
RA4.7KX6
PU2B
PU1B
LS138
C2
G2B
G2A
G1
ROM7B
ROM6B
ROM5B
ROM4B
ROM3B
ROM2B
ROM1B
ROM0B
A16B
LS139
B3
RA18
RA4.7KX4
D2
PU17A
JP8
JP9
JP7
JP6
JP5
JP4
E3
E1
E2
E0
A16A
JP34
JP42
JP35
JP43
JP36
ROM0BE
ROM0BCS
ROM2BE
ROM2BCS
ROM4BE
ROM4BCS
ROM6BE
ROM6BCS
ROM1B
ROM3B
ROM5B
ROM7B
BK1-0
BK1-1
BK1-2
BK1-3
BK1-4
BK1-5
BK1-6
BK1-7
C6
C5
C4
C3
B7
B6
B5
B4
CE GND OE
/VPP
VCC
LS367
C1
JP56
JP54
JP52
JP50
JP57
JP55
JP53
JP51
RA16
RA4.7KX8
LS245
C1
A16

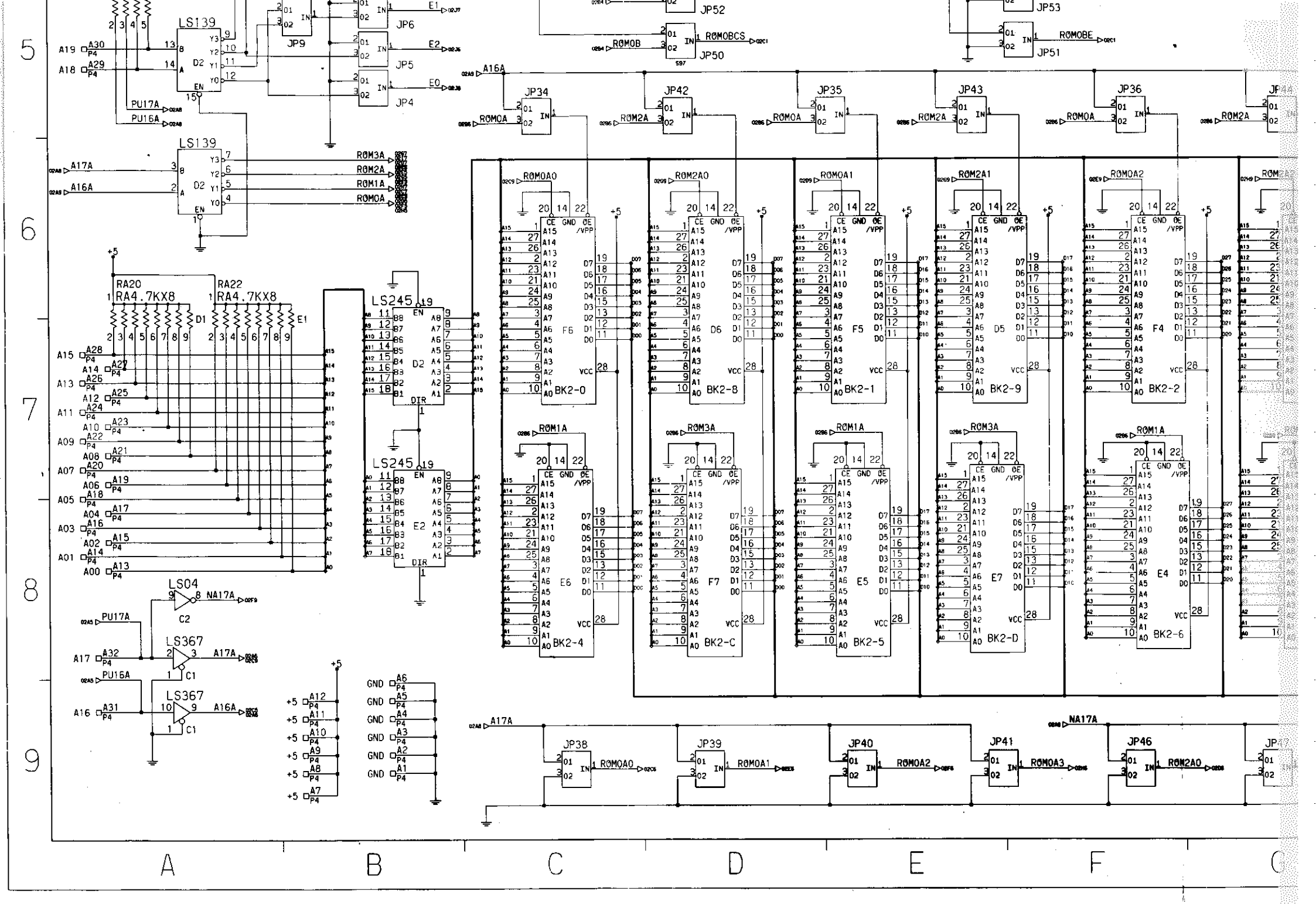
LS139
D2
JP9
JP6
JP5
JP4
JP52
JP50
JP53
JP51
ROMOBCS
ROMOBE
ROMOB
JP34
JP42
JP35
JP43
JP36
ROMOA
ROM2A
ROM3A
ROM1A
ROM0A0
ROM2A0
ROM0A1
ROM2A1
ROM0A2
RA20
RA4.7KX8
RA22
RA4.7KX8
LS245
LS04
LS367
JP38
JP39
JP40
JP41
JP46
ROM0A0
ROM0A1
ROM0A2
ROM0A3
ROM2A0
NA17A
A17A
A16A
PU17A
PU16A
A17
A16
BK2-0
BK2-8
BK2-1
BK2-9
BK2-2
BK2-4
BK2-C
BK2-5
BK2-D
BK2-6
F6
D6
F5
D5
F4
E6
F7
E5
E7
E4
E2
E1
E0
A
B
C
D
E
F

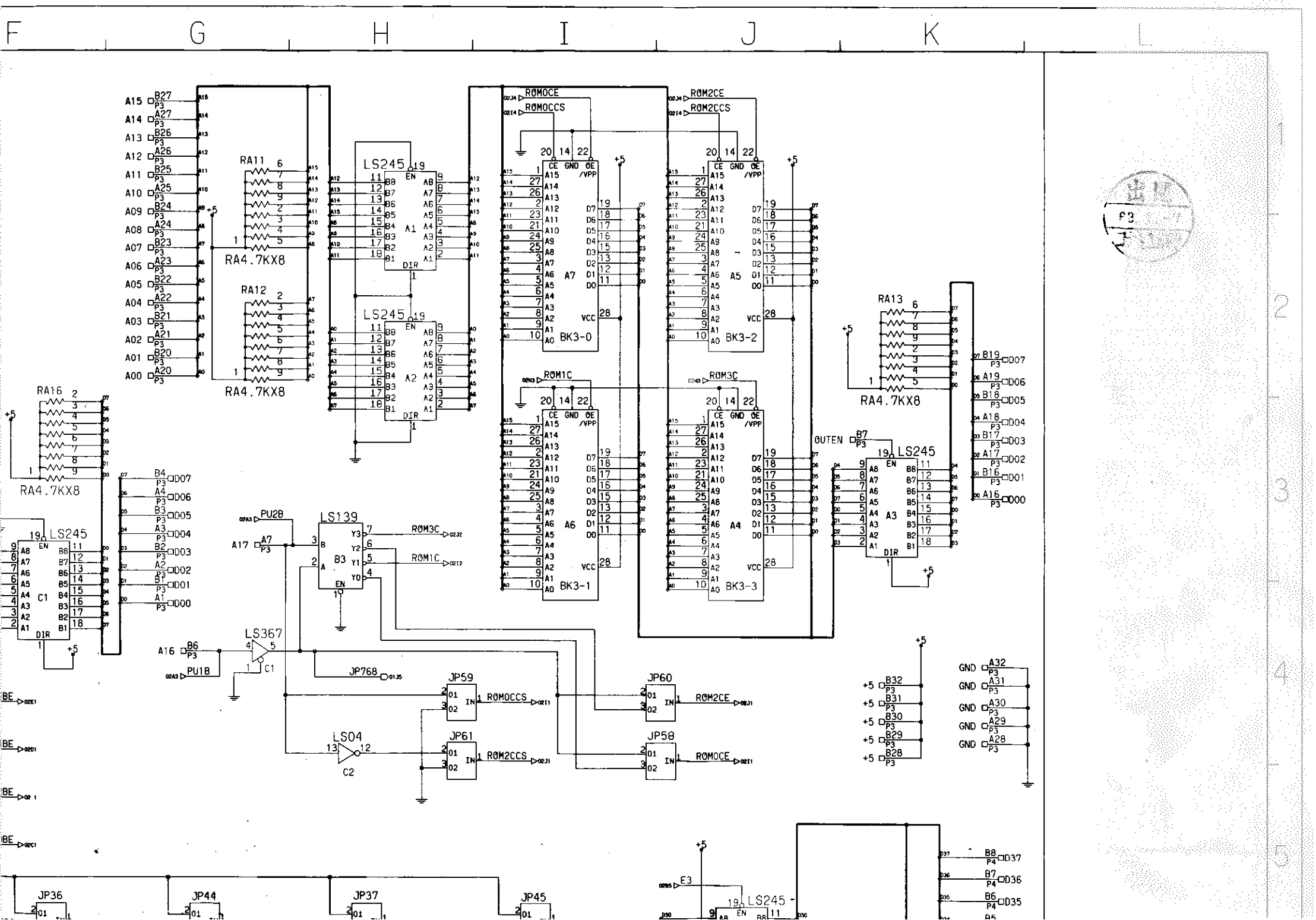
F G H I J K L
A15 B27 P3
A14 A27 P3
A13 B26 P3
A12 A26 P3
A11 B25 P3
A10 A25 P3
A09 B24 P3
A08 A24 P3
A07 B23 P3
A06 A23 P3
A05 B22 P3
A04 A22 P3
A03 B21 P3
A02 A21 P3
A01 B20 P3
A00 A20 P3
RA11
RA4.7KX8
RA12
RA4.7KX8
LS245
A1
A2
DIR
ROMOCE
ROMOCCS
ROM2CE
ROM2CCS
BK3-0
BK3-2
BK3-1
BK3-3
A7
A5
A6
A4
ROM1C
ROM3C
RA13
RA4.7KX8
OUTEN
B7 P3
A3
RA16
RA4.7KX8
C1
B4 P3 D07
A4 P3 D06
B3 P3 D05
A3 P3 D04
B2 P3 D03
A2 P3 D02
B1 P3 D01
A1 P3 D00
PU2B
A17 A7 P3
LS139
B3
ROM3C
ROM1C
LS367
A16 B6 P3
PU1B
C1
JP768
JP59
ROMOCCS
JP60
ROM2CE
LS04
C2
JP61
ROM2CCS
JP58
ROMOCE
+5
B32 P3
B31 P3
B30 P3
B29 P3
B28 P3
GND A32 P3
GND A31 P3
GND A30 P3
GND A29 P3
GND A28 P3
B19 P3 D07
A19 P3 D06
B18 P3 D05
A18 P3 D04
B17 P3 D03
A17 P3 D02
B16 P3 D01
A16 P3 D00
BE
JP36
JP44
JP37
JP45
E3
B8 P4 D37
B7 P4 D36
B6 P4 D35

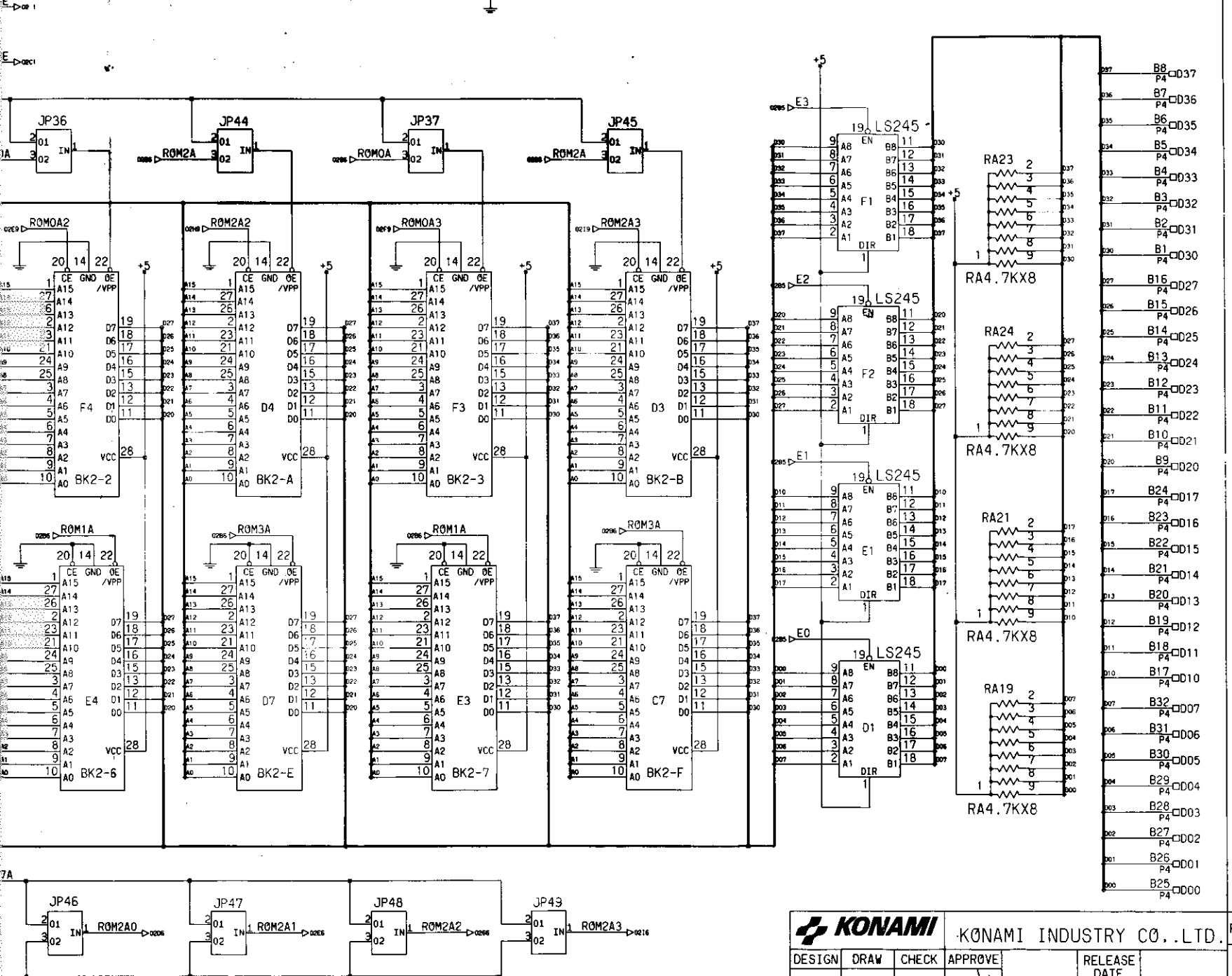

KONAMI	KONAMI INDUSTRY CO.,LTD.							REG.TYPE	SCHEMATIC DIAGRAM
DESIGN	DRAW	CHECK	APPROVE		RELEASE DATE			NAME	ROM BOARD PWB350955
S. YASUDA	T. MATSUURA			SCALE	1 : 1	TOLE-RANCE	A1	CODE NO.	100087

F G H I J K L