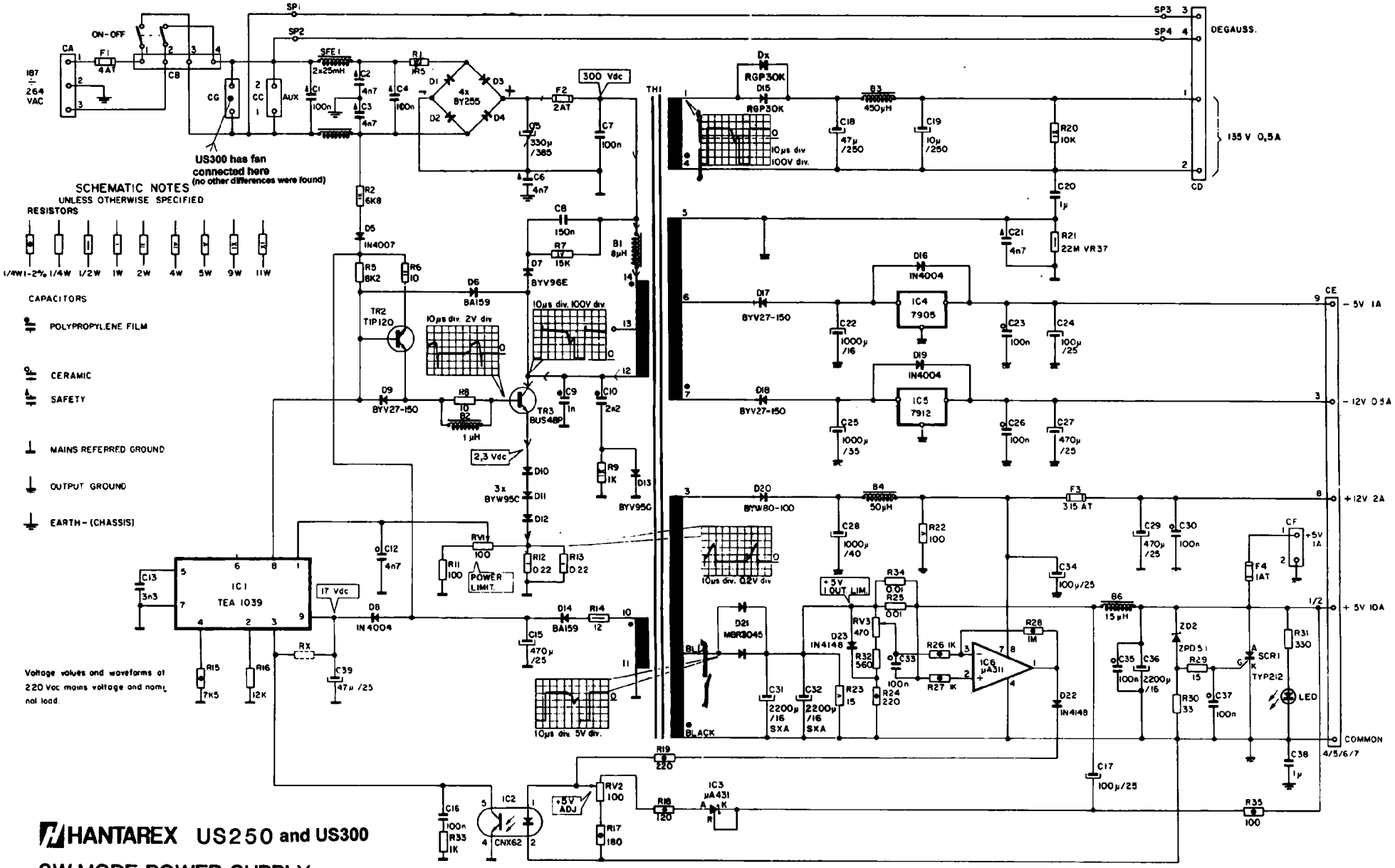

HANTAREX US250 and US300

SW.MODE POWER SUPPLY

SCHEMATIC DIAGRAM 28/10/86

This document has been downloaded from:
FLIPPERSPILL.COM