This document has been downloaded from:

The largest resource for amusement machines
documentation on the world wide web!

FLIPPERSPILL.COM

Table of Contents

Sheet 1A	Table of Contents
Sheet 1B	Millipede Main Wiring Diagram (039258-01 A)
Sheet 2A	Regulator/Audio II PCB Schematic Diagram (035435-02 F), Color Raster Power Supply Wiring Diagram (037669-01 C)
Sheet 2B	Coin-Door Wiring Diagram (A037542-01 D), Utility Panel Wiring Diagram (A038004-01 E), Fluorescent Light Wiring Diagram (035833-01 A), Coupler PCB Schematic (A035220-02 C)

Game PCB Schematics (038874-XX B), Sheets 3A—7A

Sheet 3A	Memory Map and Schematic Notes
Sheet 3B	Power Input, Clock, Horizontal and Vertical Sync Chains
Sheet 4A	Power-On Reset, Watchdog, Microprocessor, and Address Decoders
Sheet 4B	Program Memory, -28 Volt Supply, and High-Score Table
Sheet 5A	Playfield Address Selectors, Playfield Memory, and Playfield Data
Sheet 5B	Motion Object Control, Picture Memory, Horizontal Position, and Line Buffer
Sheet 6A	Color Memory Address Selectors, Motion Object Color Selectors, Color Memory, and Color Output
Sheet 6B	Coin Door Input, Trak-Ball™ Input, Option Switch Input, Control Panel Input, and Joystick Input
Sheet 7A	Audio Output, Coin Counter & LED Output

NOTE

This staple temporarily holds the schematic package together. Remove the staple before using these schematics.

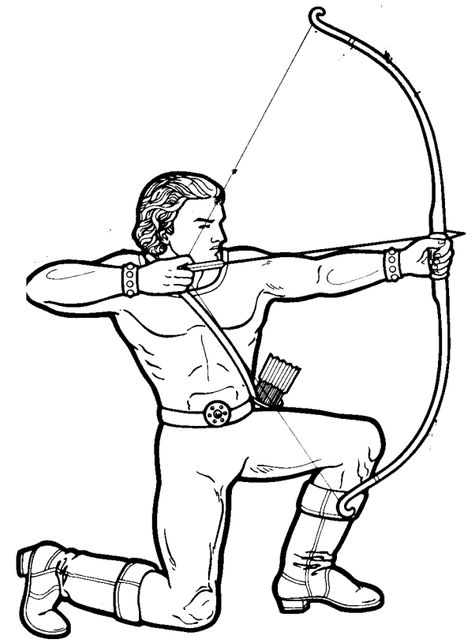

Schematic Package Supplement to

ATARI® MILLIPEDE™

Operation, Maintenance, and Service Manual

10 L

© ATARI INC. 1982

SP-217 Sheet 1A
1st printing

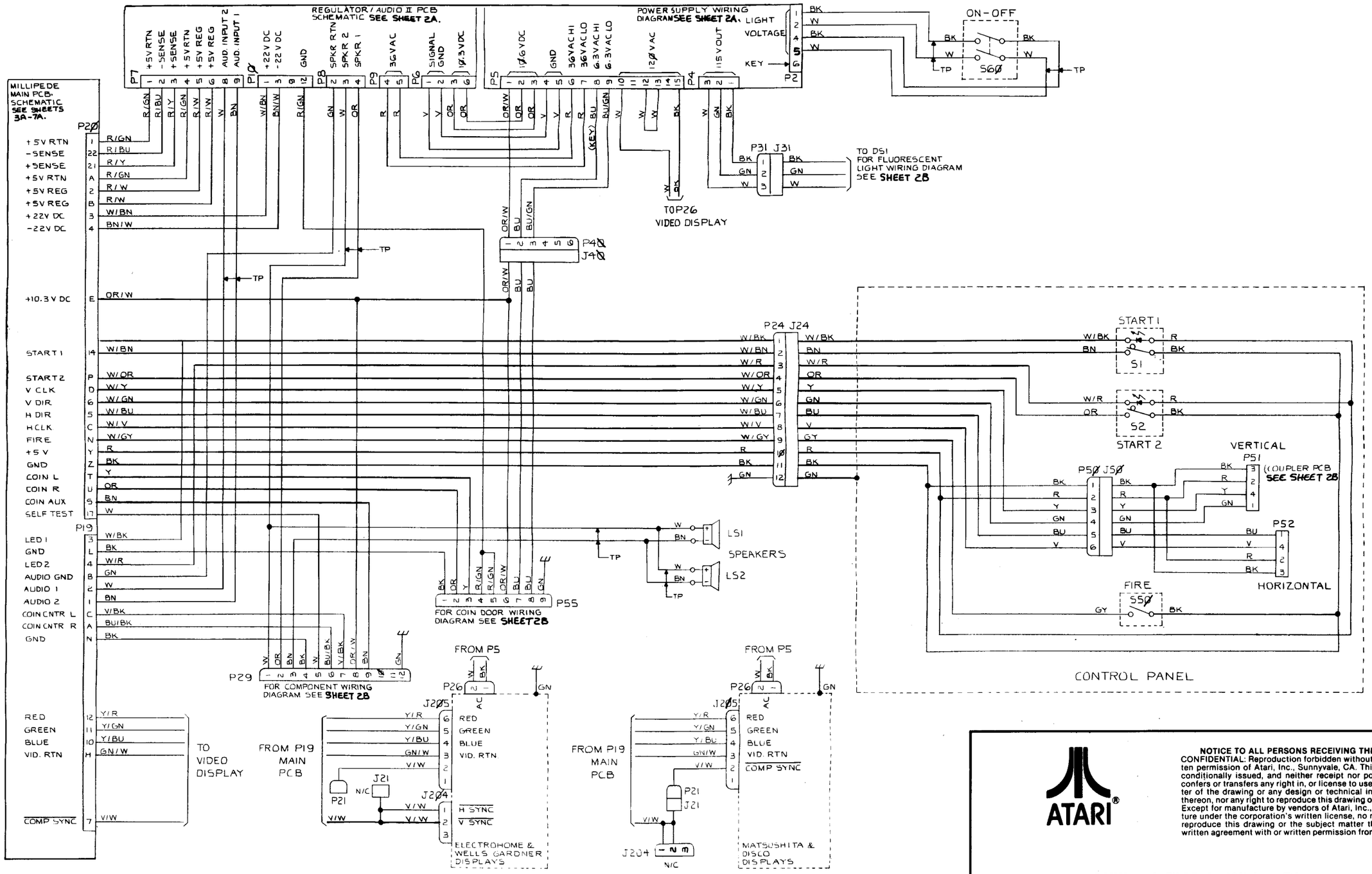

NOTICE TO ALL PERSONS RECEIVING THIS DRAWING
CONFIDENTIAL: Reproduction forbidden without the specific written permission of Atari, Inc., Sunnyvale, CA. This drawing is only conditionally issued, and neither receipt nor possession thereof confers or transfers any right in, or license to use, the subject matter of the drawing or any design or technical information shown thereon, nor any right to reproduce this drawing or any part thereof. Except for manufacture by vendors of Atari, Inc., and for manufacture under the corporation's written license, no right is granted to reproduce this drawing or the subject matter thereof, unless by written agreement with or written permission from the corporation.

ATARI®

Millipede™ Main Wiring Diagram

© ATARI INC., 1982

A Warner Communications Company

SP-217 Sheet 1B
1st printing

Regulator/Audio II PCB Schematic Diagram

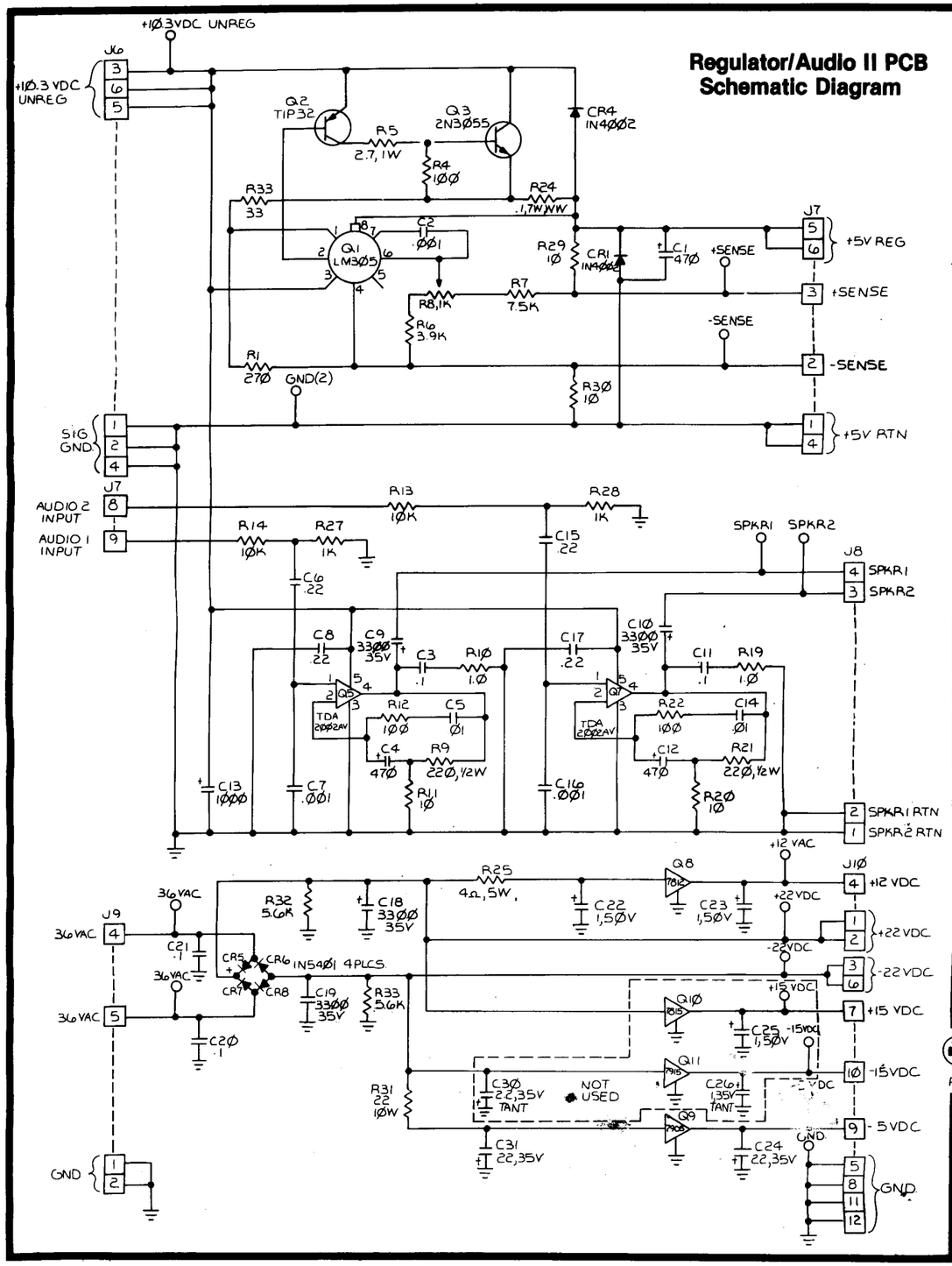

Color Raster Power Supply Wiring Diagram

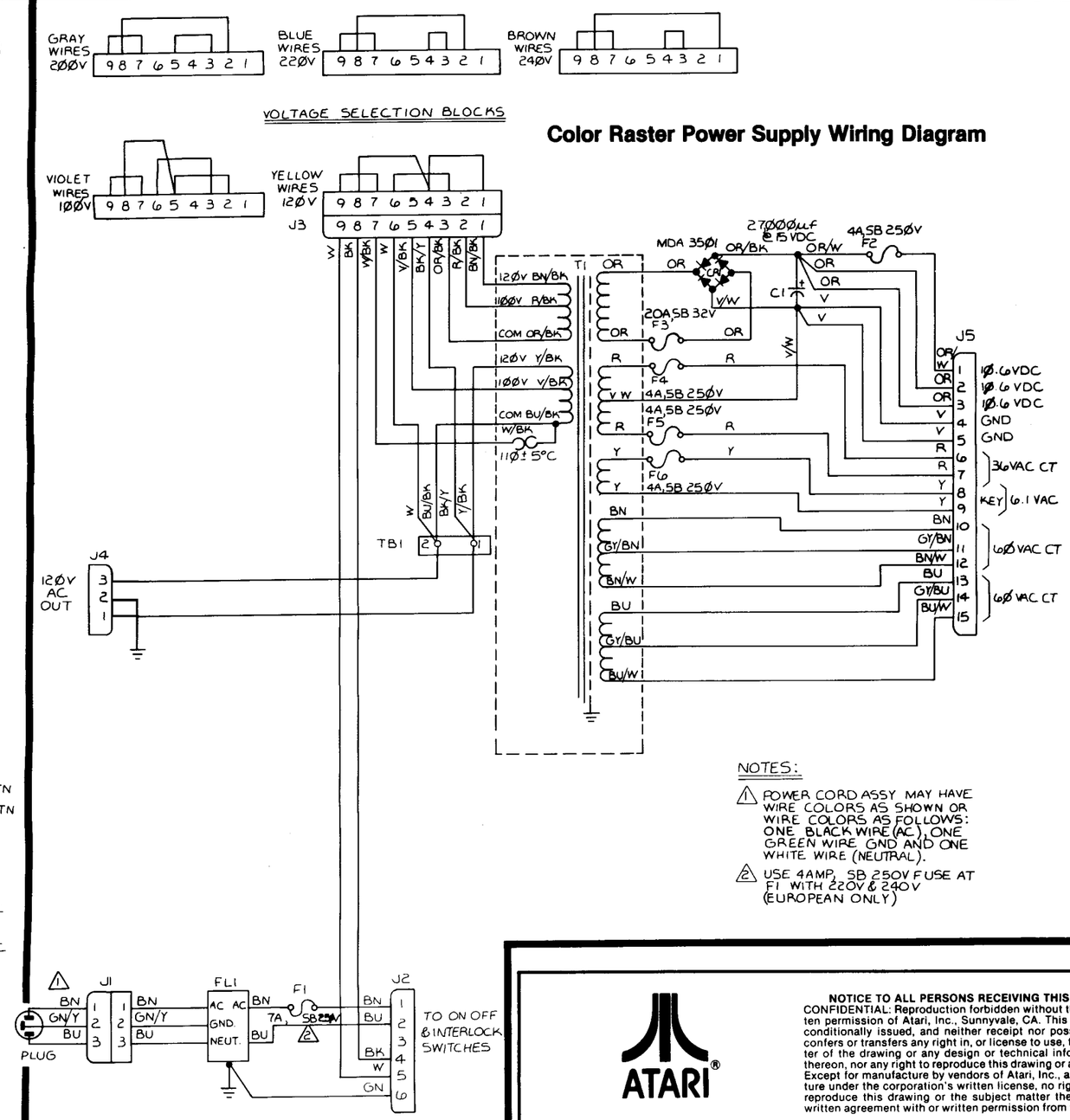

NOTES:

1. POWER CORD ASSY MAY HAVE WIRE COLORS AS SHOWN OR WIRE COLORS AS FOLLOWS: ONE BLACK WIRE (AC), ONE GREEN WIRE GND AND ONE WHITE WIRE (NEUTRAL).
2. USE 4AMP, SB 250V FUSE AT F1 WITH 220V & 240V (EUROPEAN ONLY)

ATARI®

NOTICE TO ALL PERSONS RECEIVING THIS DRAWING
CONFIDENTIAL: Reproduction forbidden without the specific written permission of Atari, Inc., Sunnyvale, CA. This drawing is only conditionally issued, and neither receipt nor possession thereof confers or transfers any right in, or license to use, the subject matter of the drawing or any design or technical information shown thereon, nor any right to reproduce this drawing or any part thereof. Except for manufacture by vendors of Atari, Inc., and for manufacture under the corporation's written license, no right is granted to reproduce this drawing or the subject matter thereof, unless by written agreement with or written permission from the corporation.

Millipede™ Reg./Audio II PCB and Power Supply Diagrams

© ATARI INC., 1982

A Warner Communications Company

SP-217 Sheet 2A
1st printing

Utility Panel Wiring Diagram

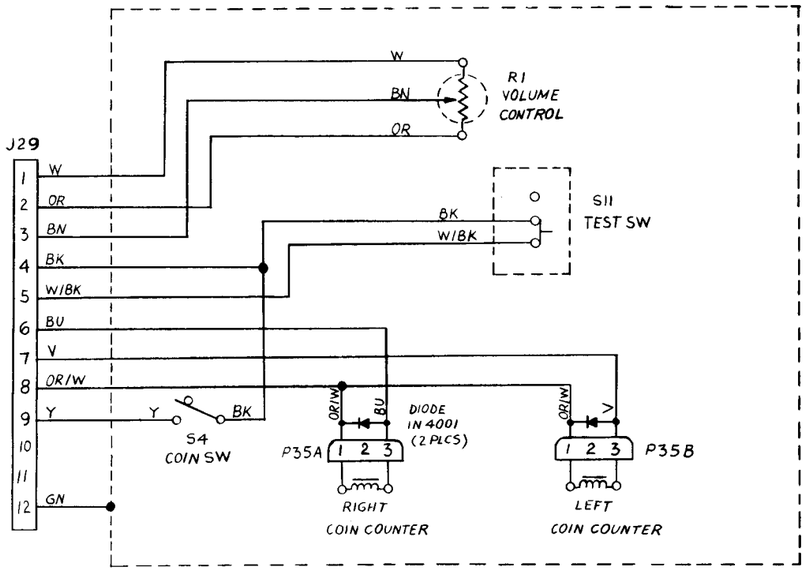

Coin Door Wiring Diagram

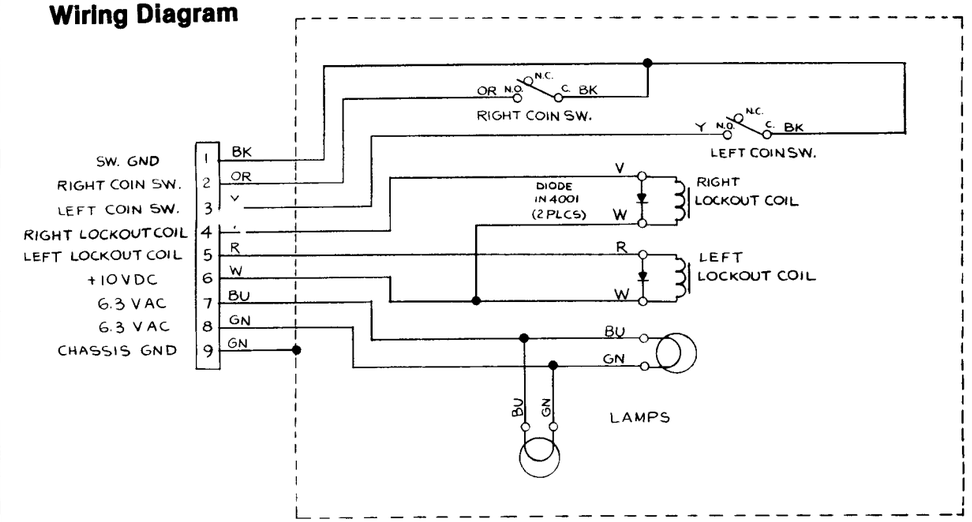

Coupler PCB Schematic

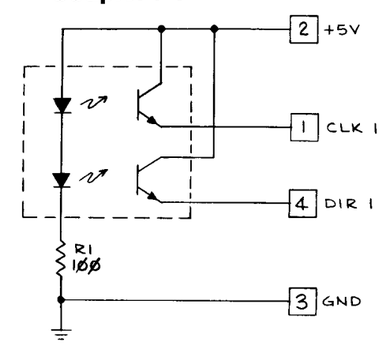

Fluorescent Light Wiring Diagram

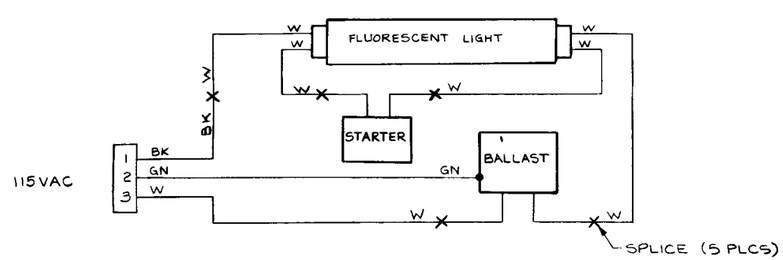

NOTICE TO ALL PERSONS RECEIVING THIS DRAWING
CONFIDENTIAL: Reproduction forbidden without the specific written permission of Atari, Inc., Sunnyvale, CA. This drawing is only conditionally issued, and neither receipt nor possession thereof confers or transfers any right in, or license to use, the subject matter of the drawing or any design or technical information shown thereon, nor any right to reproduce this drawing or any part thereof. Except for manufacture by vendors of Atari, Inc., and for manufacture under the corporation's written license, no right is granted to reproduce this drawing or the subject matter thereof, unless by written agreement with or written permission from the corporation.

ATARI®

Millipede™ Game Wiring Interfaces

© ATARI INC., 1982

A Warner Communications Company

SP-217 Sheet 2B
1st printing

MEMORY MAP

HEXA-DECIMAL ADDRESS	ADDRESS BUS SIGNAL LINES															R/W	DATA BUS SIGNAL LINES								FUNCTION
	A14	A13	A12	A11	A10	A9	A8	A7	A6	A5	A4	A3	A2	A1	A0		D7	D6	D5	D4	D3	D2	D1	D0	
0000–03FF	0	0	0	0	0	A	A	A	A	A	A	A	A	A	A		D	D	D	D	D	D	D	D	RAM
0400–0410	0	0	0	0	1							A	A	A	A		D	D	D	D	D	D	D	D	$\overline{I/OS0}$
0408	0	0	0	0	1							1	0	0	0	R	D	D	D	D	D	D	D	D	OPTION SWITCH 0
0800–0810	0	0	0	1	0							A	A	A	A		D	D	D	D	D	D	D	D	$\overline{I/OS1}$
0808	0	0	0	1	0							1	0	0	0	R	D	D	D	D	D	D	D	D	OPTION SWITCH 1
1000–13BF	0	0	1			A	A	A	A	A	A	A	A	A	A		D	D	D	D	D	D	D	D	PLAYFIELD RAM
13C0-13CF	0	0	1			1	1	1	1	0	0	A	A	A	A		D	D	D	D	D	D	D	D	MOTION OBJECT PICTURE
13D0-13DF	0	0	1			1	1	1	1	0	1	A	A	A	A		D	D	D	D	D	D	D	D	MOTION OBJECT VERTICAL
13E0-13EF	0	0	1			1	1	1	1	1	0	A	A	A	A		D	D	D	D	D	D	D	D	MOTION OBJECT HORIZONTAL
13F0-13FF	0	0	1			1	1	1	1	1	1	A	A	A	A		D	D	D	D	D	D	D	D	MOTION OBJECT COLOR
2000	0	1	0	0	0					0	0				0		D								TRACKBALL HORIZ DIR
																		D							VBLANK
																			D						START 1 SWITCH
																				D					FIRE 1 SWITCH
																					D	D	D	D	TRACKBALL HORIZ COUNT
																					D	D	D	D	OPTION SWITCH 2
2001	0	1	0	0	0					0	0				1		D								TRACKBALL VERT DIR
																			D						START 2 SWITCH
																				D					FIRE 2 SWITCH
																					D	D	D	D	TRACKBALL VERT COUNT
																					D	D	D	D	OPTION SWITCH 2
2010	0	1	0	0	0					0	1				0		D	D	D						COIN SWITCHES
																				D					SLAM SWITCH
																					D	D	D	D	JOYSTICK POSITIONS
2011	0	1	0	0	0					0	1				1		D								SELF-TEST SWITCH
																			D						CABINET SELECT
2030	0	1	0	0	0					1	1						D	D	D	D	D	D	D	D	$\overline{EAROMRD}$
2480–248F	0	1	0	0	1	0	0	1			0	A	A	A	A	W	D	D	D	D	D	D	D	D	STAMP COLOR RAM
2490–249F	0	1	0	0	1	0	0	1			1	A	A	A	A	W	D	D	D	D	D	D	D	D	MOTION OBJECT COLOR RAM
2501	0	1	0	0	1	0	1	0					0	0	1	W	D								COIN CNTR L
2502	0	1	0	0	1	0	1	0					0	1	0	W	D								COIN CNTR R
2503	0	1	0	0	1	0	1	0					0	1	1	W	D								START LED 1
2504	0	1	0	0	1	0	1	0					1	0	0	W	D								START LED 2
2505	0	1	0	0	1	0	1	0					1	0	1	W	D								TRACKBALL ENABLE (TBEN)
2506	0	1	0	0	1	0	1	0					1	1	0	W	D								VIDEO ROTATE (VIDROT)
2507	0	1	0	0	1	0	1	0					1	1	1	W	D								CONTROL SELECT (CNTRLSEL)
2600	0	1	0	0	1	1	0	0								W									$\overline{IRQRES}$
2680	0	1	0	0	1	1	0	1								W									$\overline{WATCHDOG}$
2700	0	1	0	0	1	1	1	0								W					D	D	D	D	$\overline{EAROMCON}$
2780	0	1	0	0	1	1	1	1								W	D	D	D	D	D	D	D	D	$\overline{EAROMWR}$
300-3FFF	0	1	1	A	A	A	A	A	A	A	A	A	A	A	A	R	D	D	D	D	D	D	D	D	ROM (NOT USED)
400-7FFF	1	A	A	A	A	A	A	A	A	A	A	A	A	A	A	R	D	D	D	D	D	D	D	D	ROM

Schematic Reference Designators and Symbols

Logic symbols depict the logic function performed by that particular device and may differ from the manufacturer's data.

REFERENCE DESIGNATORS:

C	Capacitor
CR	Diode, signal or rectifier
F	Fuse
J	Connector
L	Inductor, fixed or variable
LS	Speaker
P	Connector
Q	Transistor or silicon-controlled rectifier
R	Resistor, fixed or variable
S	Switch
T	Transformer
TP	Twisted wire pair
VR	Voltage regulator
Y	Crystal

WIRE COLORS:

R	Red
GN	Green
Y	Yellow
W	White
BU	Blue
BN	Brown
BK	Black
OR	Orange
V	Violet
GY	Gray

Electrical components shown on the schematic diagrams are in the following units unless otherwise noted:

Capacitors = microfarads (μf)
Resistors = ohms (Ω)
Inductors = microhenrys (μh)

SYMBOLS:

Ground

PCB edge connector pad

Test Point

PCB test connector pad

ATARI®

NOTICE TO ALL PERSONS RECEIVING THIS DRAWING
CONFIDENTIAL: Reproduction forbidden without the specific written permission of Atari, Inc., Sunnyvale, CA. This drawing is only conditionally issued, and neither receipt nor possession thereof confers or transfers any right in, or license to use, the subject matter of the drawing or any design or technical information shown thereon, nor any right to reproduce this drawing or any part thereof. Except for manufacture by vendors of Atari, Inc., and for manufacture under the corporation's written license, no right is granted to reproduce this drawing or the subject matter thereof, unless by written agreement with or written permission from the corporation.

Millipede™ Memory Map and Schematic Notes

© ATARI INC., 1982

A Warner Communications Company

SP-217 Sheet 3A
1st printing

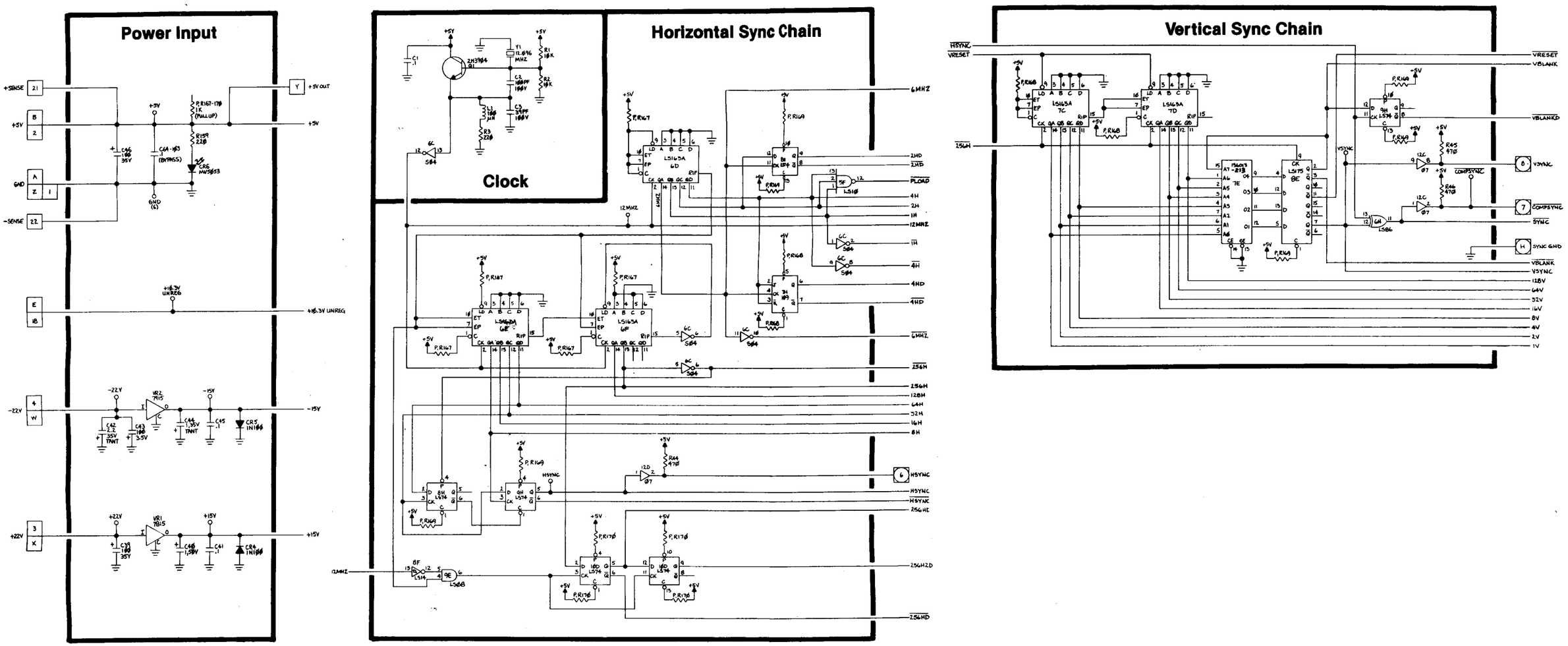

ATARI®

NOTICE TO ALL PERSONS RECEIVING THIS DRAWING
CONFIDENTIAL: Reproduction forbidden without the specific written permission of Atari, Inc., Sunnyvale, CA. This drawing is only conditionally issued, and neither receipt nor possession thereof confers or transfers any right in, or license to use, the subject matter of the drawing or any design or technical information shown thereon, nor any right to reproduce this drawing or any part thereof. Except for manufacture by vendors of Atari, Inc., and for manufacture under the corporation's written license, no right is granted to reproduce this drawing or the subject matter thereof, unless by written agreement with or written permission from the corporation.

Millipede™ PCB Schematic Diagram

© ATARI INC., 1982

A Warner Communications Company

SP-217 Sheet 3B
1st printing

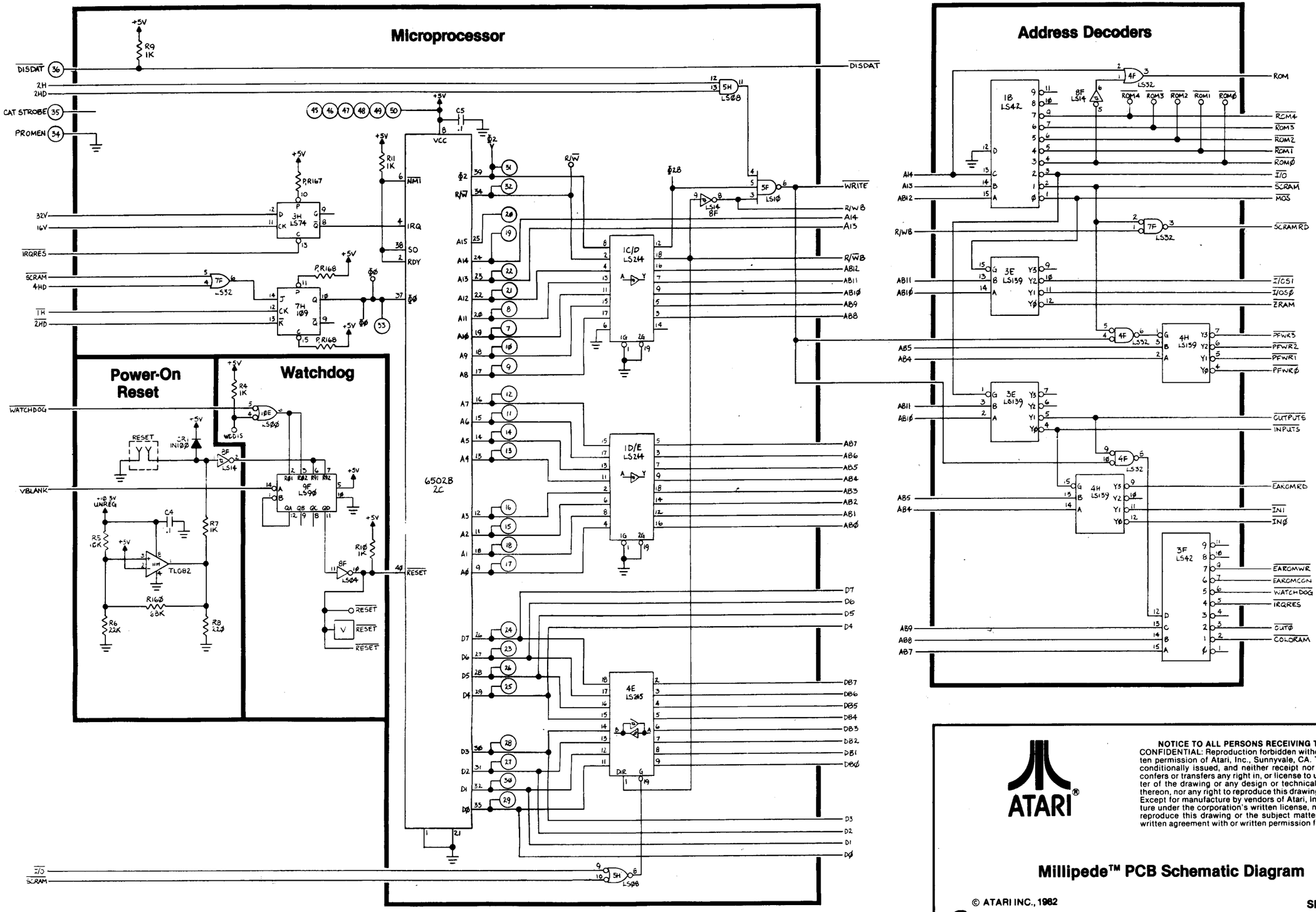

NOTICE TO ALL PERSONS RECEIVING THIS DRAWING
CONFIDENTIAL: Reproduction forbidden without the specific written permission of Atari, Inc., Sunnyvale, CA. This drawing is only conditionally issued, and neither receipt nor possession thereof confers or transfers any right in, or license to use, the subject matter of the drawing or any design or technical information shown thereon, nor any right to reproduce this drawing or any part thereof. Except for manufacture by vendors of Atari, Inc., and for manufacture under the corporation's written license, no right is granted to reproduce this drawing or the subject matter thereof, unless by written agreement with or written permission from the corporation.

ATARI®

Millipede™ PCB Schematic Diagram

© ATARI INC., 1982

A Warner Communications Company

SP-217 Sheet 4A
1st printing

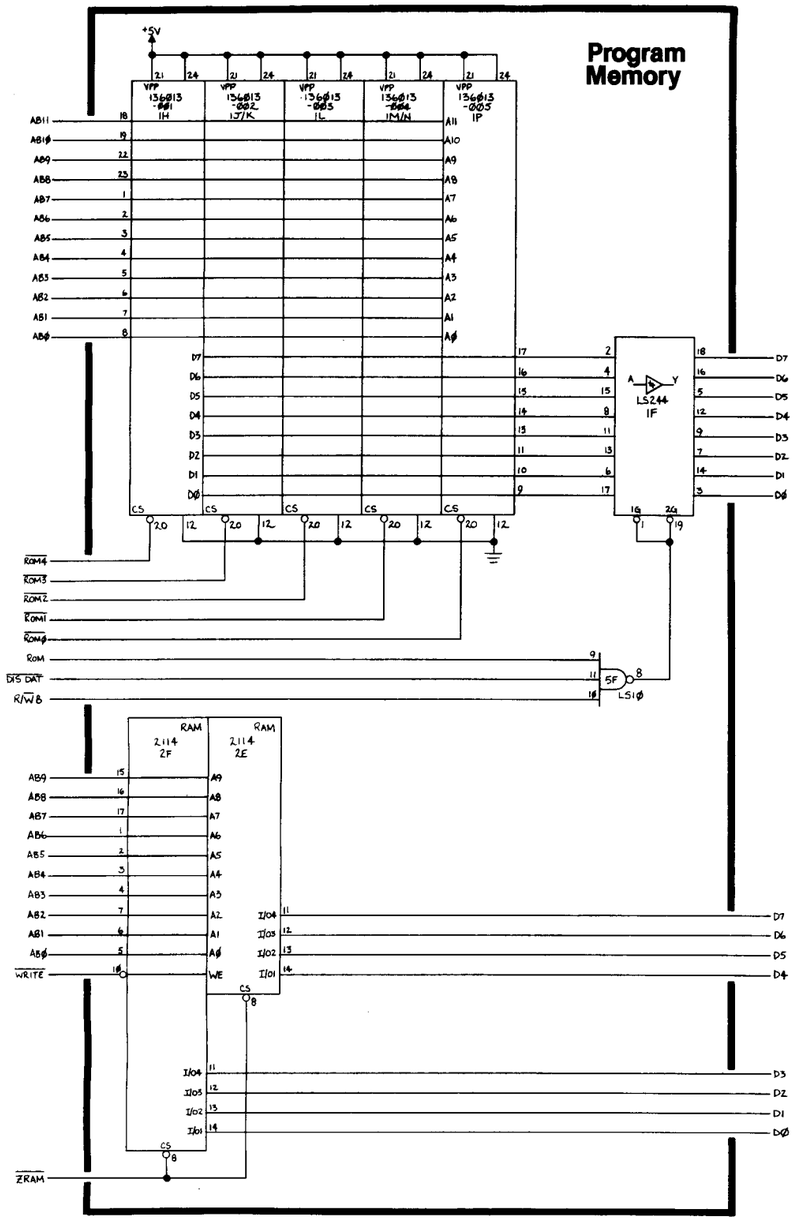

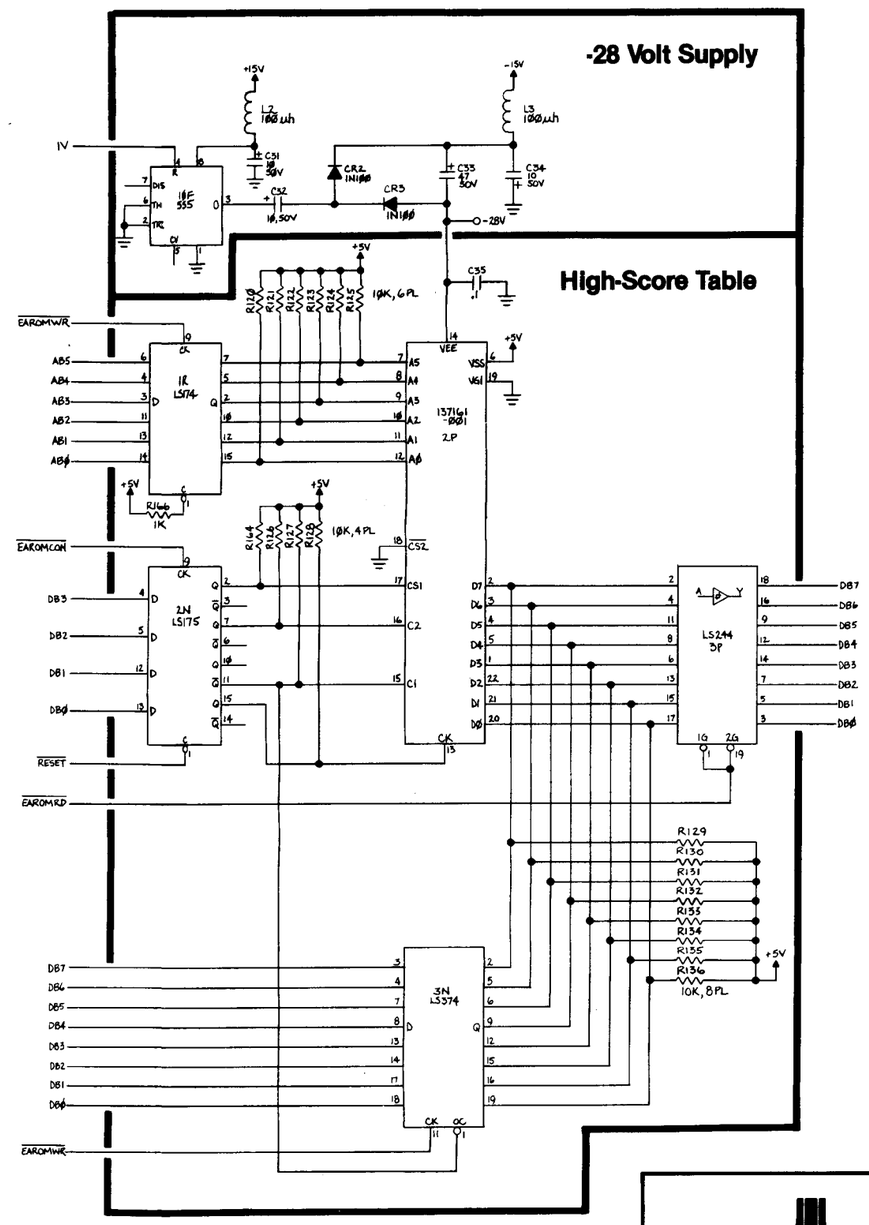

NOTICE TO ALL PERSONS RECEIVING THIS DRAWING
CONFIDENTIAL: Reproduction forbidden without the specific written permission of Atari, Inc., Sunnyvale, CA. This drawing is only conditionally issued, and neither receipt nor possession thereof confers or transfers any right in, or license to use, the subject matter of the drawing or any design or technical information shown thereon, nor any right to reproduce this drawing or any part thereof. Except for manufacture by vendors of Atari, Inc., and for manufacture under the corporation's written license, no right is granted to reproduce this drawing or the subject matter thereof, unless by written agreement with or written permission from the corporation.

ATARI®

Millipede™ PCB Schematic Diagram

© ATARI INC., 1982

A Warner Communications Company

SP-217 Sheet 4B
1st printing

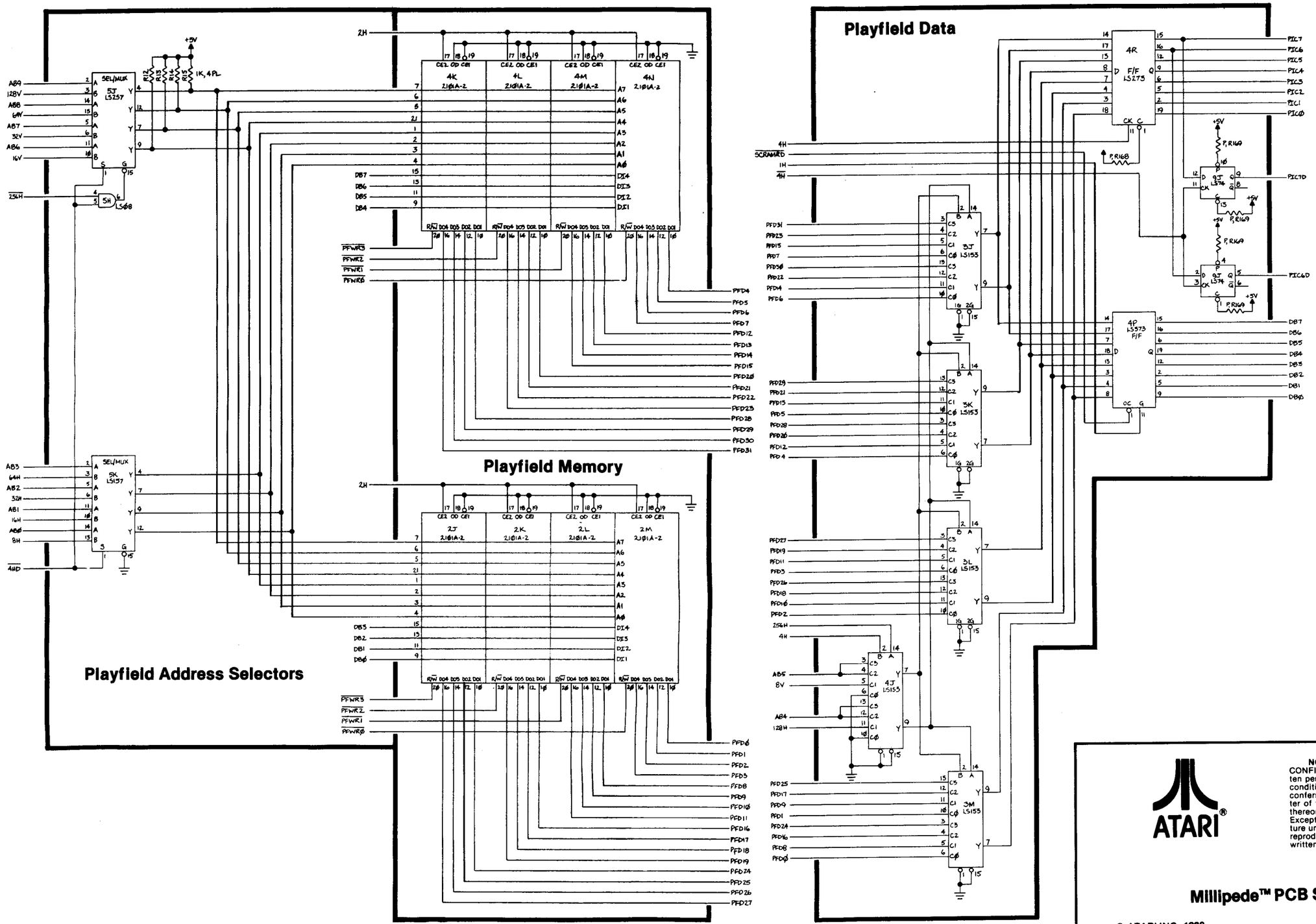

NOTICE TO ALL PERSONS RECEIVING THIS DRAWING
CONFIDENTIAL: Reproduction forbidden without the specific written permission of Atari, Inc., Sunnyvale, CA. This drawing is only conditionally issued, and neither receipt nor possession thereof confers or transfers any right in, or license to use, the subject matter of the drawing or any design or technical information shown thereon, nor any right to reproduce this drawing or any part thereof. Except for manufacture by vendors of Atari, Inc., and for manufacture under the corporation's written license, no right is granted to reproduce this drawing or the subject matter thereof, unless by written agreement with or written permission from the corporation.

ATARI®

Millipede™ PCB Schematic Diagram

© ATARI INC., 1982

A Warner Communications Company

SP-217 **Sheet 5A**

1st printing

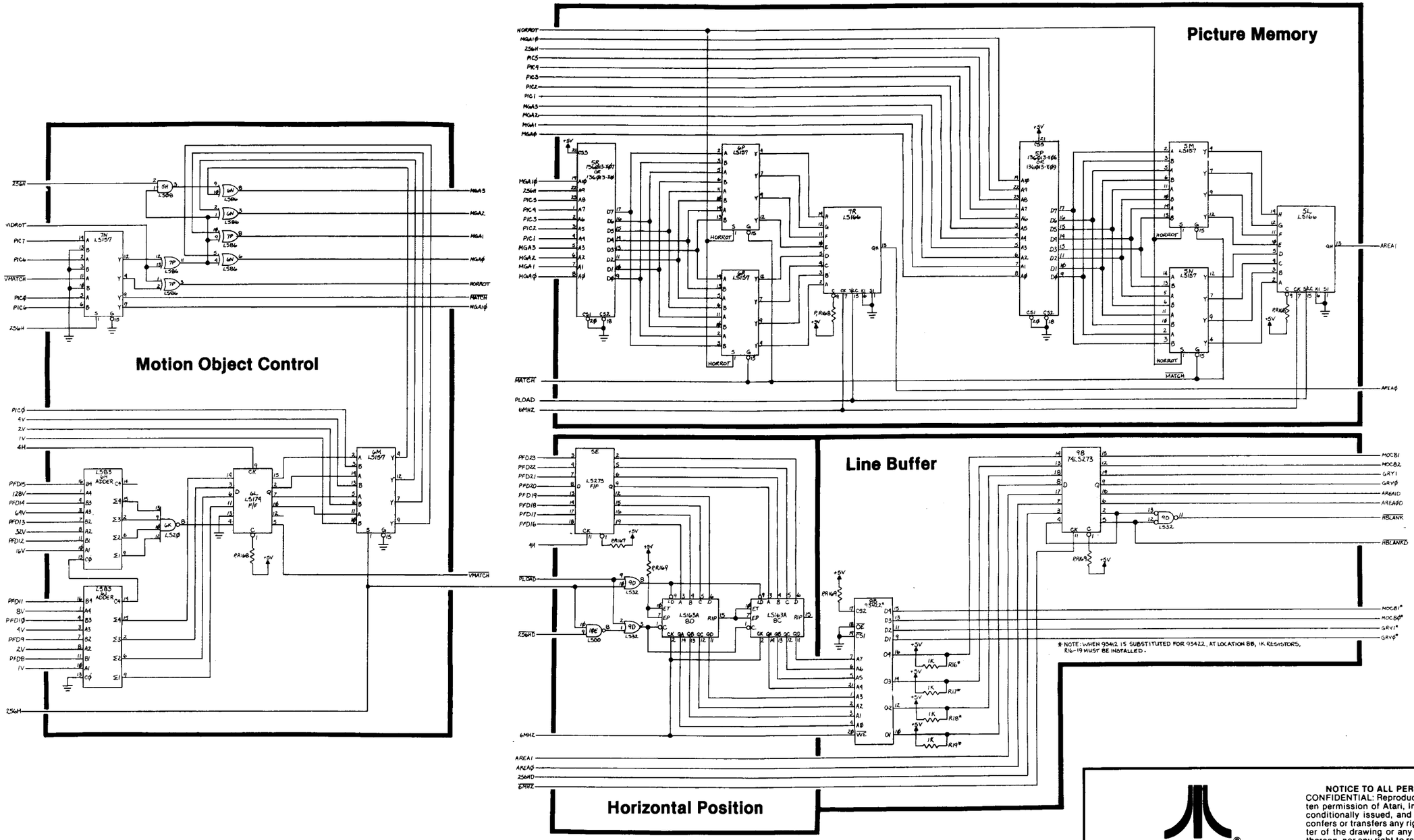

ATARI®

NOTICE TO ALL PERSONS RECEIVING THIS DRAWING
CONFIDENTIAL: Reproduction forbidden without the specific written permission of Atari, Inc., Sunnyvale, CA. This drawing is only conditionally issued, and neither receipt nor possession thereof confers or transfers any right in, or license to use, the subject matter of the drawing or any design or technical information shown thereon, nor any right to reproduce this drawing or any part thereof. Except for manufacture by vendors of Atari, Inc., and for manufacture under the corporation's written license, no right is granted to reproduce this drawing or the subject matter thereof, unless by written agreement with or written permission from the corporation.

Millipede™ PCB Schematic Diagram

© ATARI INC., 1982

A Warner Communications Company

SP-217 Sheet 5B
1st printing

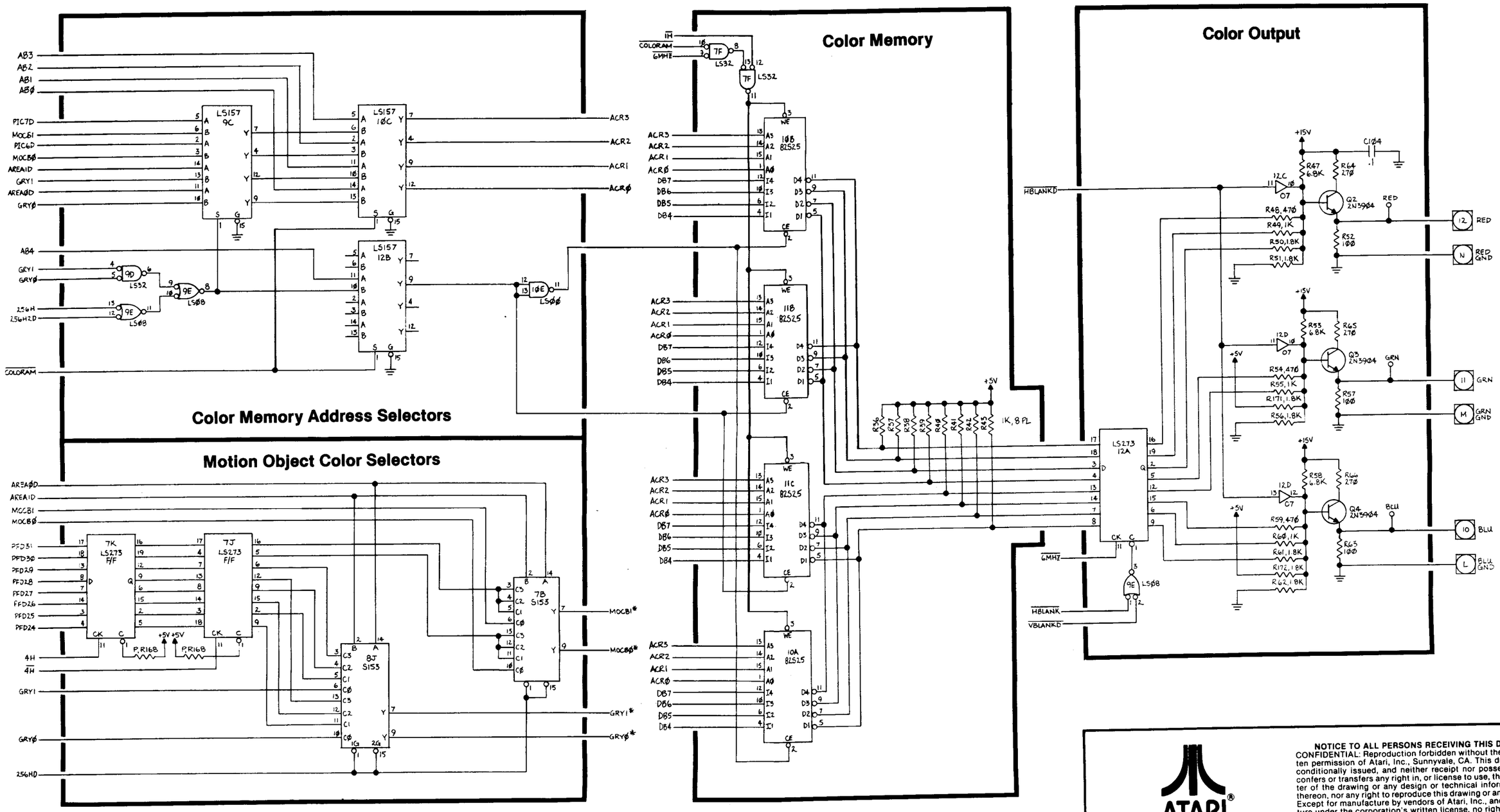

NOTICE TO ALL PERSONS RECEIVING THIS DRAWING
CONFIDENTIAL: Reproduction forbidden without the specific written permission of Atari, Inc., Sunnyvale, CA. This drawing is only conditionally issued, and neither receipt nor possession thereof confers or transfers any right in, or license to use, the subject matter of the drawing or any design or technical information shown thereon, nor any right to reproduce this drawing or any part thereof. Except for manufacture by vendors of Atari, Inc., and for manufacture under the corporation's written license, no right is granted to reproduce this drawing or the subject matter thereof, unless by written agreement with or written permission from the corporation.

ATARI®

Millipede™ PCB Schematic Diagram

© ATARI INC., 1982

A Warner Communications Company

SP-217 Sheet 6A
1st printing

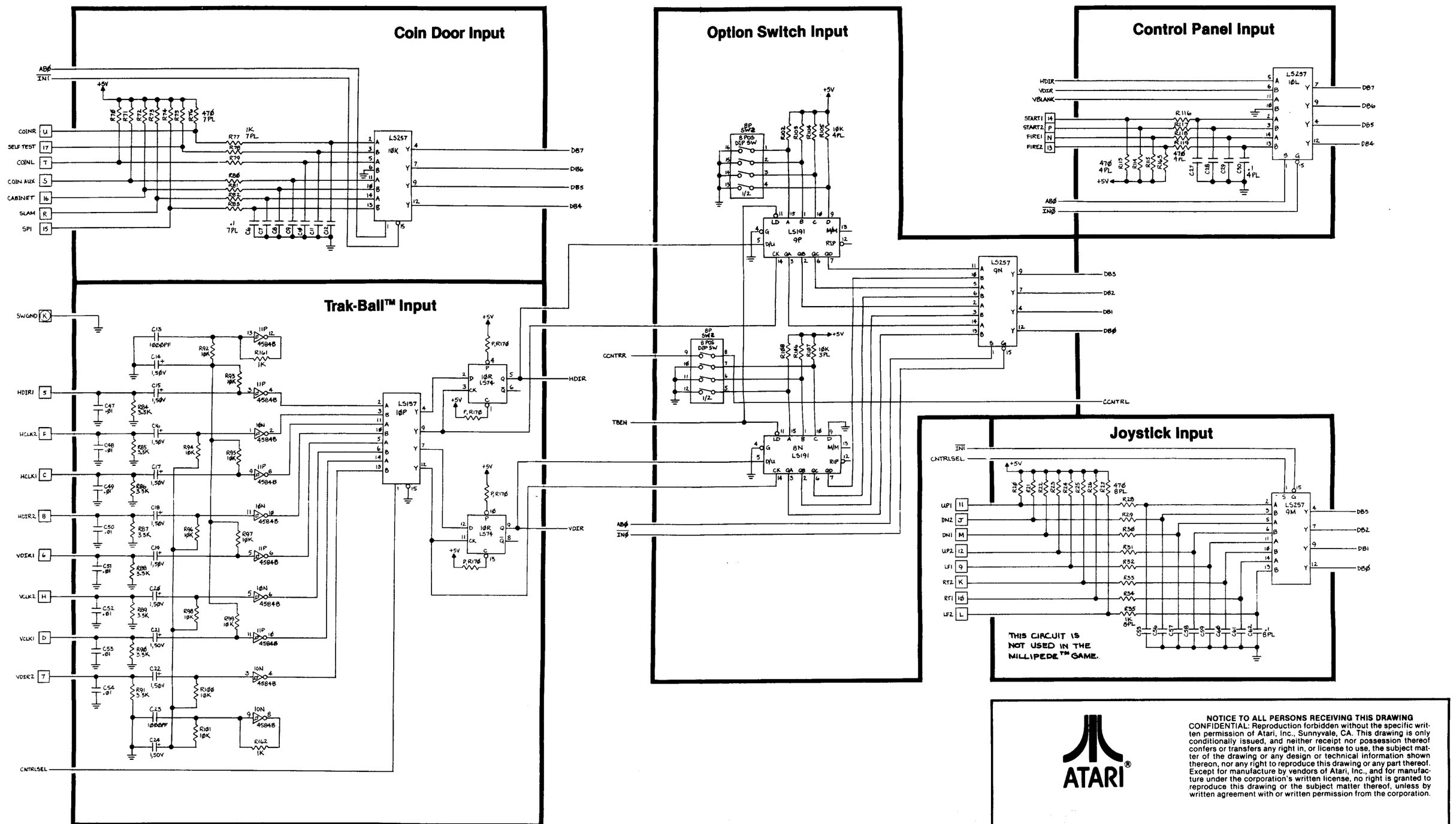

ATARI®

NOTICE TO ALL PERSONS RECEIVING THIS DRAWING
CONFIDENTIAL: Reproduction forbidden without the specific written permission of Atari, Inc., Sunnyvale, CA. This drawing is only conditionally issued, and neither receipt nor possession thereof confers or transfers any right in, or license to use, the subject matter of the drawing or any design or technical information shown thereon, nor any right to reproduce this drawing or any part thereof. Except for manufacture by vendors of Atari, Inc., and for manufacture under the corporation's written license, no right is granted to reproduce this drawing or the subject matter thereof, unless by written agreement with or written permission from the corporation.

Millipede™ PCB Schematic Diagram

© ATARI INC., 1982

A Warner Communications Company

SP-217 Sheet 6B
1st printing

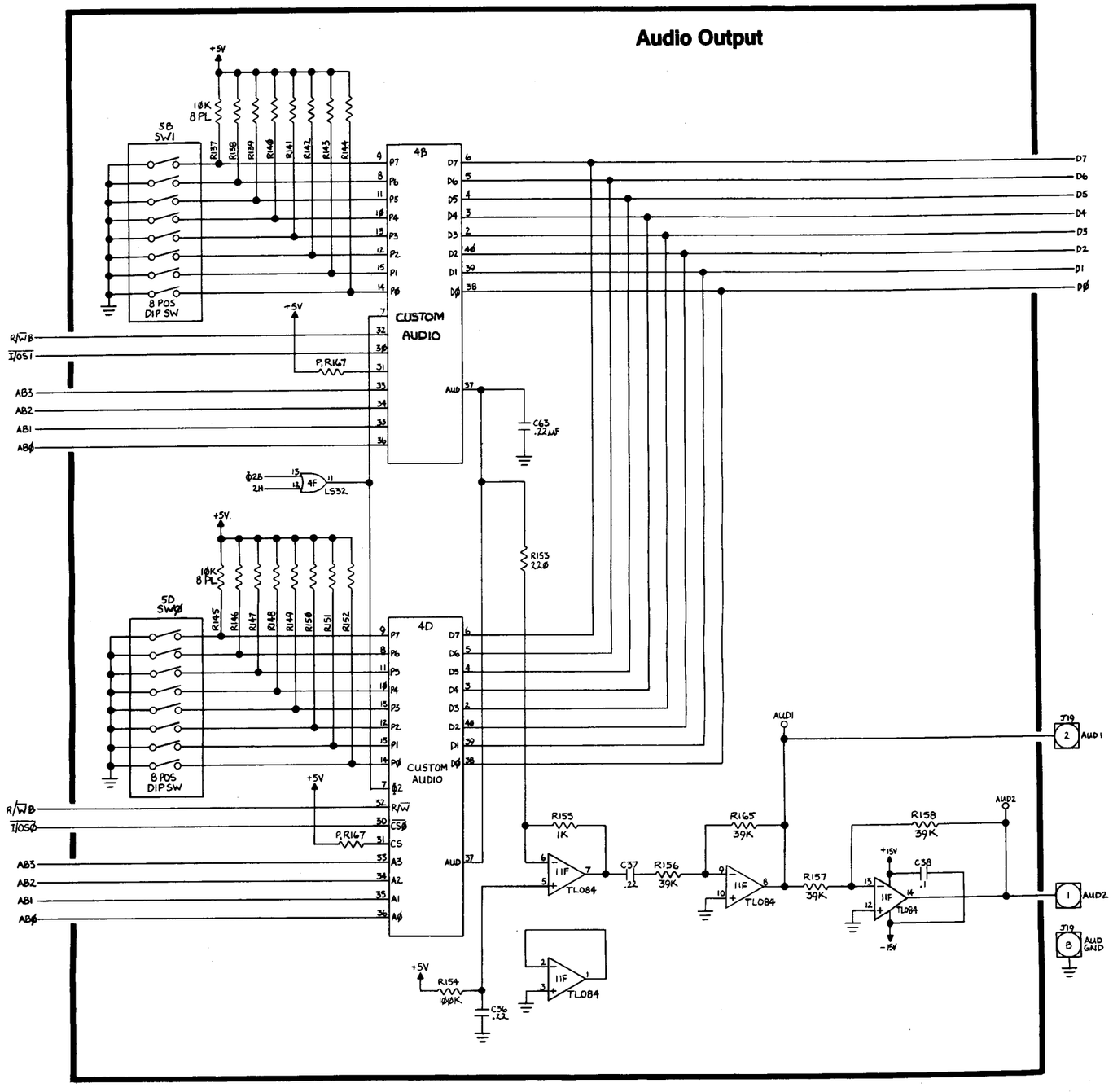

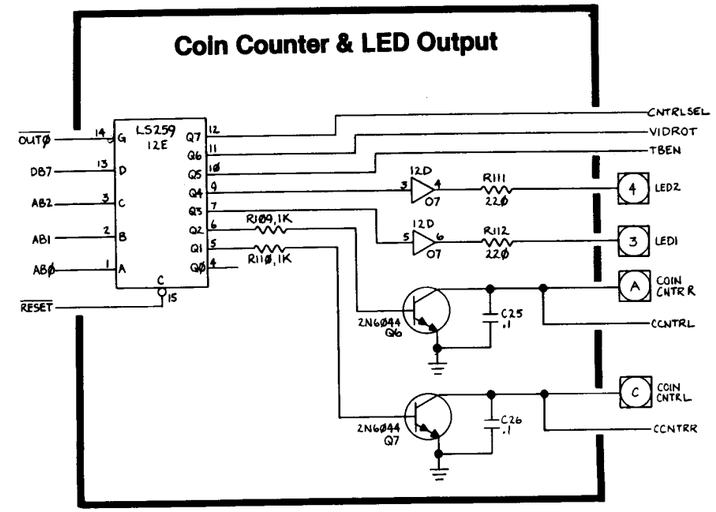

NOTICE TO ALL PERSONS RECEIVING THIS DRAWING
CONFIDENTIAL: Reproduction forbidden without the specific written permission of Atari, Inc., Sunnyvale, CA. This drawing is only conditionally issued, and neither receipt nor possession thereof confers or transfers any right in, or license to use, the subject matter of the drawing or any design or technical information shown thereon, nor any right to reproduce this drawing or any part thereof. Except for manufacture by vendors of Atari, Inc., and for manufacture under the corporation's written license, no right is granted to reproduce this drawing or the subject matter thereof, unless by written agreement with or written permission from the corporation.

ATARI®

Millipede™ PCB Schematic Diagram

© ATARI INC., 1982

A Warner Communications Company

SP-217 Sheet 7A
1st printing