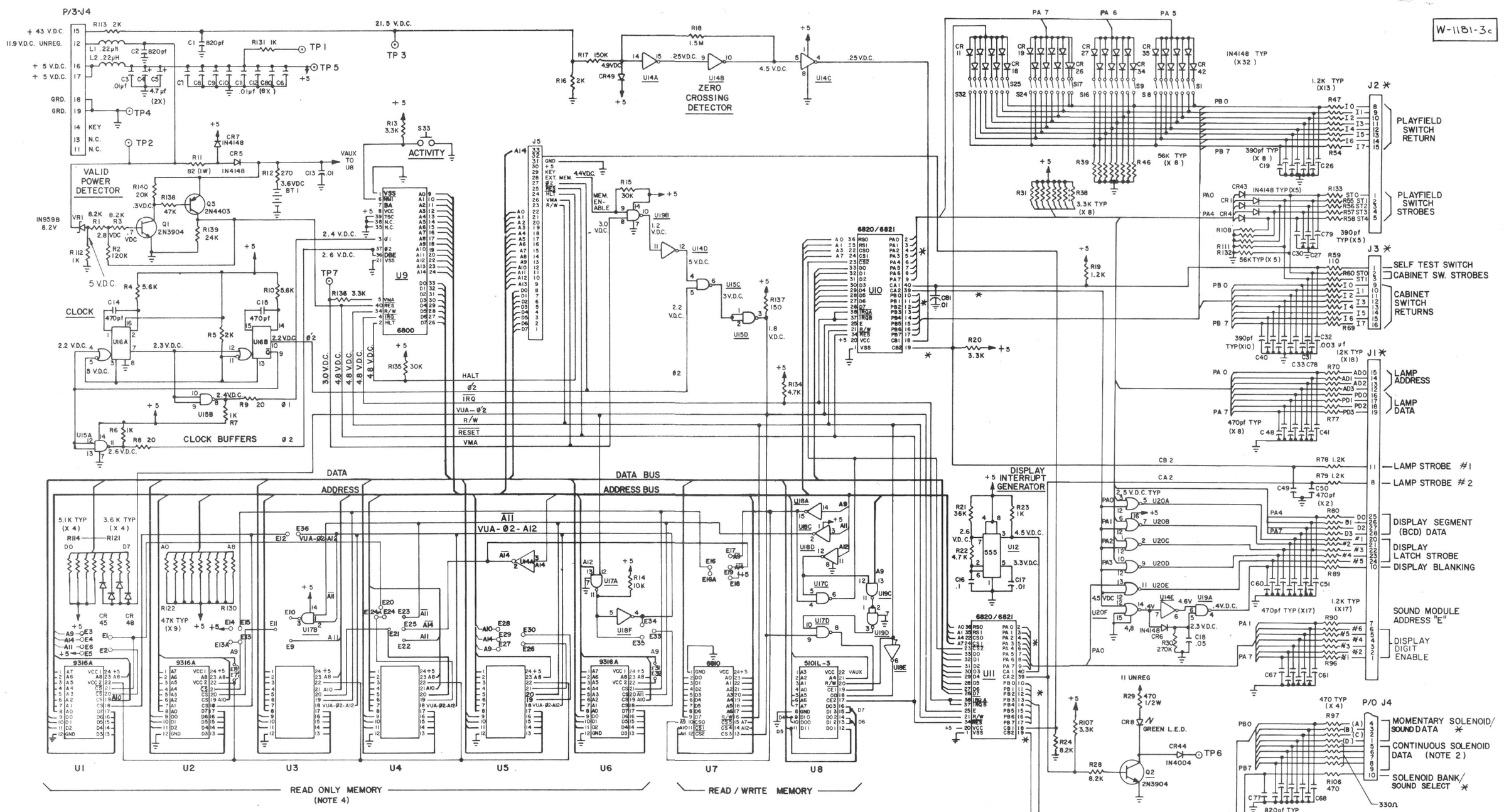

NOTES

1. ✳ INDICATES "AID" TEST POINT.
2. REMOVE A3J4 BEFORE USING AS AID TEST POINT
3. PREFIX ALL REFERENCE DESIGNATIONS WITH "A4"
4. EXACT CHIP COMPLEMENT USED IN SOCKETS U1 THRU U6 CAN VARY FOR DIFFERENT GAMES AND PRODUCTION LOTS. TABLES OF MEMORY CHIPS AND CORRESPONDING JUMPERS FOR DIFFERENT GAMES AVAILABLE FROM BALLY FIELD SERVICE DEPARTMENT.

LET.	CHANGE	DATE	BY	CK.

REMOVE ALL BURRS

TOLERANCES ON DIMENSIONS UNLESS OTHERWISE SPECIFIED
FRACTIONS · 1/64
DECIMALS · .005
ANGLES · 1°

DO NOT SCALE DRAWING

DR. BY E.V.	DATE 5-11-78	Bally MANUFACTURING CORP. 2640 BELMONT AVENUE CHICAGO, ILLINOIS
CK. BY E.G.M.	DATE 5-15-78	1119-E
APP'D BY	DATE	PRINT CONTROL
APP'D BY	DATE	FINISH:
		HARDENING:

NAME: M.P.U. CONTROL BOARD SCHEMATIC

MATERIAL

ASSEM. NO. USED ON: W

PART NO. W-1181-3c

TOTAL | SCALE

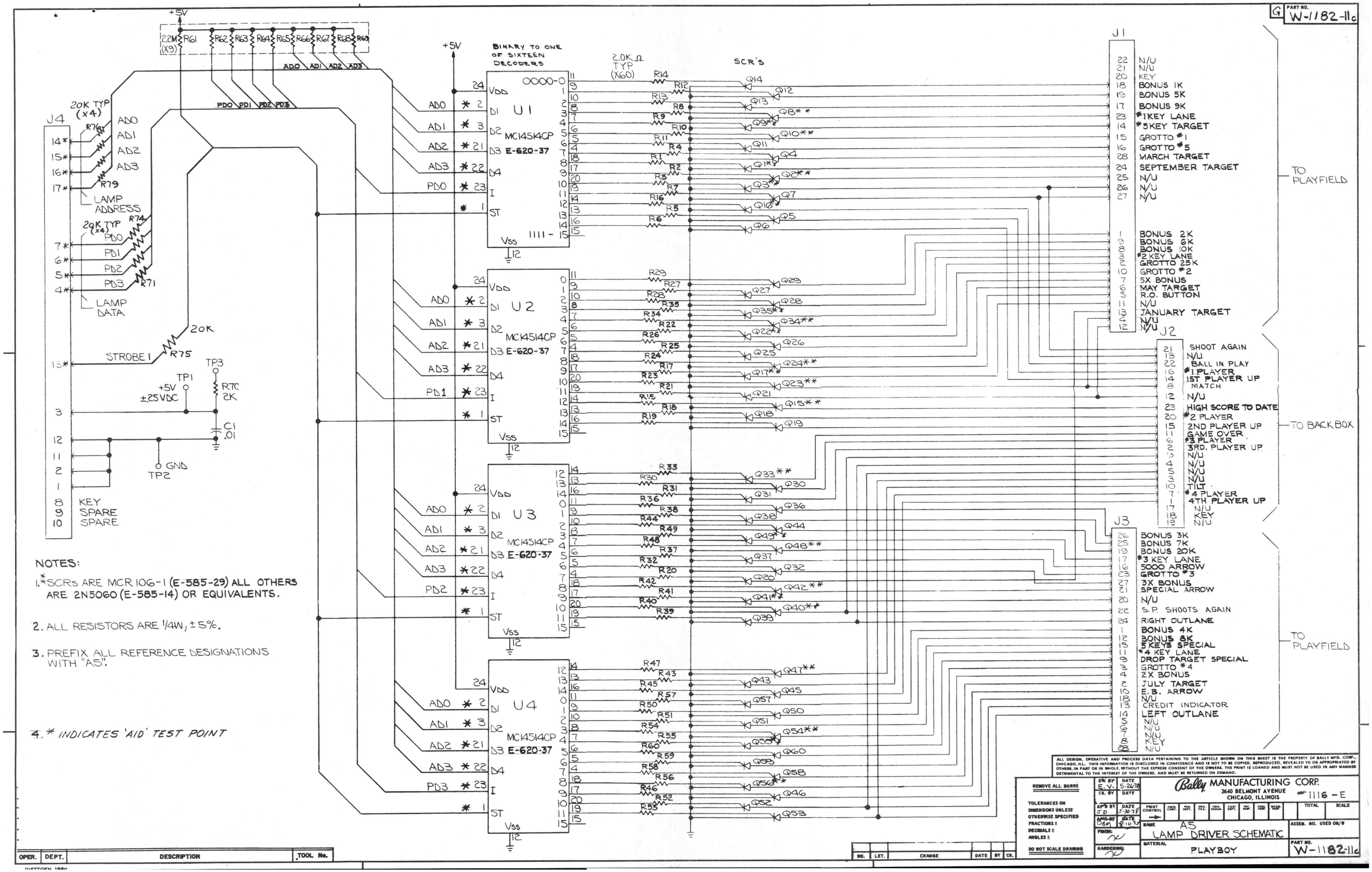

NOTES:

1. * SCRs ARE MCR 106-1 (E-585-29) ALL OTHERS ARE 2N5060 (E-585-14) OR EQUIVALENTS.

2. ALL RESISTORS ARE 1/4W, ± 5%.

3. PREFIX ALL REFERENCE DESIGNATIONS WITH "A5".

4. * INDICATES 'AID' TEST POINT

OPER.	DEPT.	DESCRIPTION	TOOL No.

NO.	LET.	CHANGE	DATE	BY	CK.

REMOVE ALL BURRS

TOLERANCES ON DIMENSIONS UNLESS OTHERWISE SPECIFIED
FRACTIONS ±
DECIMALS ±
ANGLES ±

DO NOT SCALE DRAWING

DR. BY E.V. DATE 5-26-78
CK. BY DATE
APD. BY J.D. DATE 5-30-78
APD. BY DATE 6-10-78
FINISH: N
HARDENING: N

Bally MANUFACTURING CORP.
2640 BELMONT AVENUE
CHICAGO, ILLINOIS

PRINT CONTROL → | PROD. CONT. | PUR. DEPT. | ENG. DIV. | TOOL DESIGN | QUAL. DEPT. | ENG. | TOOL | MAINT. | TOTAL | SCALE

NAME A5 LAMP DRIVER SCHEMATIC

MATERIAL PLAYBOY

ASSEM. NO. USED ON/W

PART NO. W-1182-11c

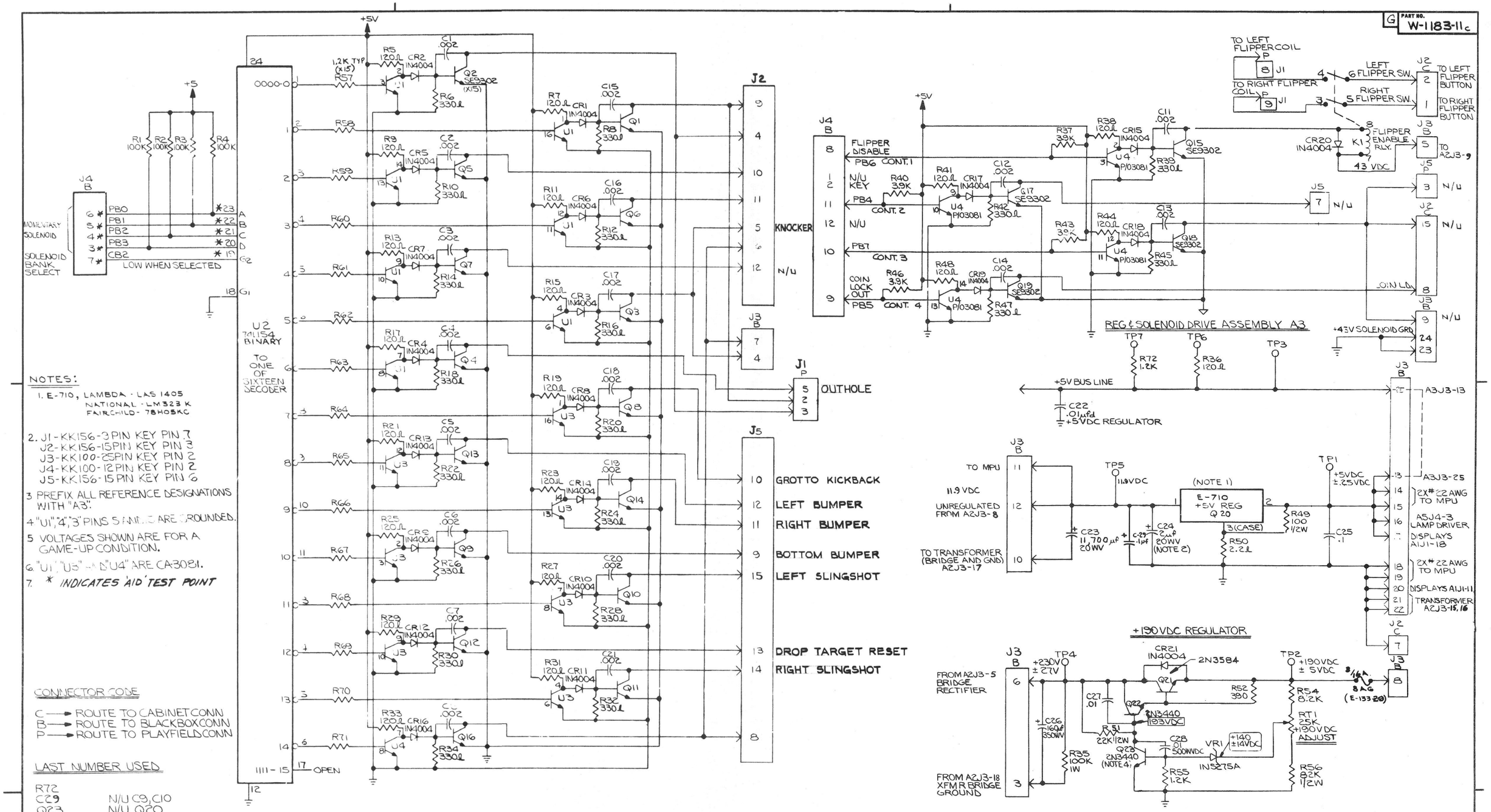
G PART NO. W-1183-11c
J2
J3
J4
J5
J1
KNOCKER
N/U
OUTHOLE
GROTTO KICKBACK
LEFT BUMPER
RIGHT BUMPER
BOTTOM BUMPER
LEFT SLINGSHOT
DROP TARGET RESET
RIGHT SLINGSHOT
U2 74LS154 BINARY
TO ONE OF SIXTEEN DECODER
MOMENTARY SOLENOID
SOLENOID BANK SELECT
LOW WHEN SELECTED
FLIPPER DISABLE
N/U KEY
COIN LOCK OUT
TO LEFT FLIPPER COIL
TO RIGHT FLIPPER COIL
LEFT FLIPPER SW.
RIGHT FLIPPER SW.
TO LEFT FLIPPER BUTTON
TO RIGHT FLIPPER BUTTON
FLIPPER ENABLE RLY.
43 VDC
TO A2J3-9
REG & SOLENOID DRIVE ASSEMBLY A3
+43V SOLENOID GRD
COIN LD.
+5V BUS LINE
C22 .01µfd +5VDC REGULATOR
TO MPU
11.9 VDC
UNREGULATED FROM A2J3-8
TO TRANSFORMER (BRIDGE AND GND) A2J3-17
E-710 +5V REG Q 20
(NOTE 1)
(NOTE 2)
+5VDC ±.25VDC
A3J3-25
2X#22 AWG TO MPU
A5J4-3 LAMP DRIVER
DISPLAYS A1J1-18
DISPLAYS A1J1-11
TRANSFORMER A2J3-15,16
+190VDC REGULATOR
FROM A2J3-5 BRIDGE RECTIFIER
FROM A2J3-18 XFMR BRIDGE GROUND
+230V ±27V
+190VDC ±5VDC
2N3584
2N3440
+190VDC ADJUST
+140 ±14VDC
IN5275A
8 AG (E-133-20)
NOTES:
1. E-710, LAMBDA - LAS 1405
NATIONAL - LM323 K
FAIRCHILD - 78H05KC
2. J1 - KK156-3 PIN KEY PIN 7
J2 - KK156-15 PIN KEY PIN 3
J3 - KK100-25 PIN KEY PIN 2
J4 - KK100-12 PIN KEY PIN 2
J5 - KK156-15 PIN KEY PIN 6
3. PREFIX ALL REFERENCE DESIGNATIONS WITH "A3".
4. "U1", "4", "3" PINS 5 AND 10 ARE GROUNDED.
5. VOLTAGES SHOWN ARE FOR A GAME-UP CONDITION.
6. "U1", "U5" AND "U4" ARE CA3081.
7. * INDICATES 'AID' TEST POINT
CONNECTOR CODE
C → ROUTE TO CABINET CONN
B → ROUTE TO BLACKBOX CONN
P → ROUTE TO PLAYFIELD CONN
LAST NUMBER USED
R72
C29
Q23
CR21
VR1
N/U C9, C10
N/U Q20
ALL DESIGN, OPERATIVE AND PROCESS DATA PERTAINING TO THE ARTICLE SHOWN ON THIS SHEET IS THE PROPERTY OF BALLY MFG. CORP., CHICAGO, ILL. THIS INFORMATION IS DISCLOSED IN CONFIDENCE AND IS NOT TO BE COPIED, REPRODUCED, REVEALED TO OR APPROPRIATED BY OTHERS, IN PART OR IN WHOLE, WITHOUT THE EXPRESS CONSENT OF THE OWNERS. THE PRINT IS LOANED AND MUST NOT BE USED IN ANY MANNER DETRIMENTAL TO THE INTEREST OF THE OWNERS, AND MUST BE RETURNED ON DEMAND.
REMOVE ALL BURRS
DO NOT SCALE DRAWING
Bally MANUFACTURING CORP.
2640 BELMONT AVENUE
CHICAGO, ILLINOIS
1116-E
SOLENOID DRIVER
VOLTAGE REGULATOR SCHEMATIC
PLAYBOY
PART NO. W-1183-11c
OPER. DEPT. DESCRIPTION TOOL No.
DIETZGEN 1964

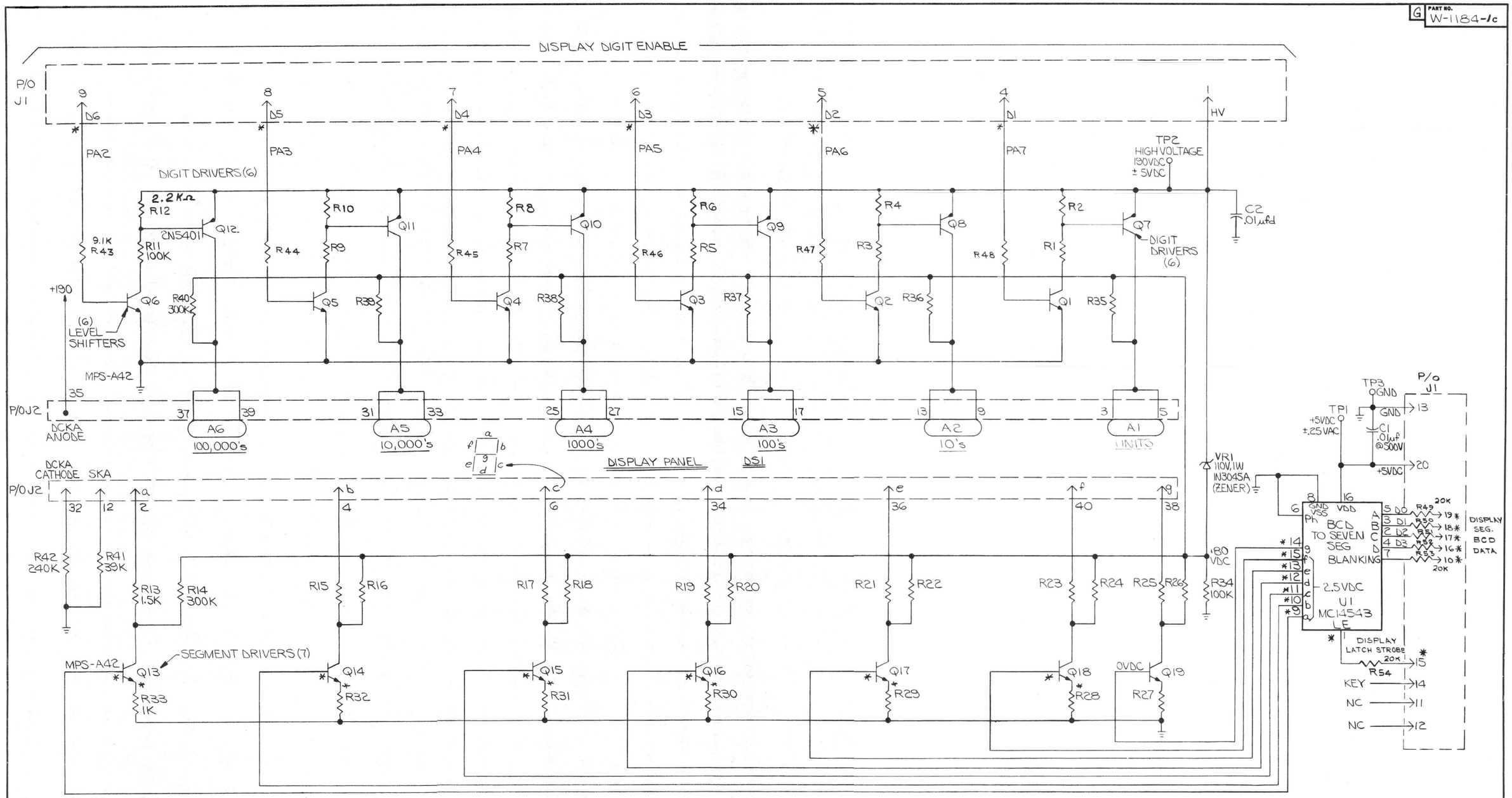

NOTES:

1. UNLESS OTHERWISE SPECIFIED ALL RESISTORS ARE ±5%, 1/4W
2. PREFIX ALL REFERENCE DESIG. WITH ASSEMBLY REFERENCE DESIG. "A1"
3. * INDICATES 'A1D' TEST POINT.

DIE SIZE — C.C. — FT. PER M — LBS. PER M —

REMOVE ALL BURRS

TOLERANCES ON DIMENSIONS UNLESS OTHERWISE SPECIFIED
FRACTIONS ±
DECIMALS ±
ANGLES ±

DO NOT SCALE DRAWING

DR. BY	DATE
DG	7-7-77
CK. BY	DATE
	7-8-77
APD BY	DATE
	10/14/77
APD BY	DATE
	10/14/77
FINISH:	
HARDENING:	

Bally MANUFACTURING CORP. ALL NOVELTIES
2640 BELMONT AVENUE
CHICAGO, ILLINOIS

NOV 10 1977

PRINT CONTROL	ZERO CONT.	CAP. APP.	FILE	ASSEM. DRAWING	SCHT.	INS.	TEST	MASTER REQ.		TOTAL	SCALE
											N

NAME: DISPLAY BOARD SCHEMATIC "A1"
ASSEM. NO. USED ON/W: AS-2518-21
MATERIAL
PART NO. W-1184-1c

OPER.	DEPT.	DESCRIPTION	TOOL No.

NO.	LET.	CHANGE	DATE	BY	CK.

G PART NO. W-1185-1c

TRANSFORMER ASSEMBLY A2

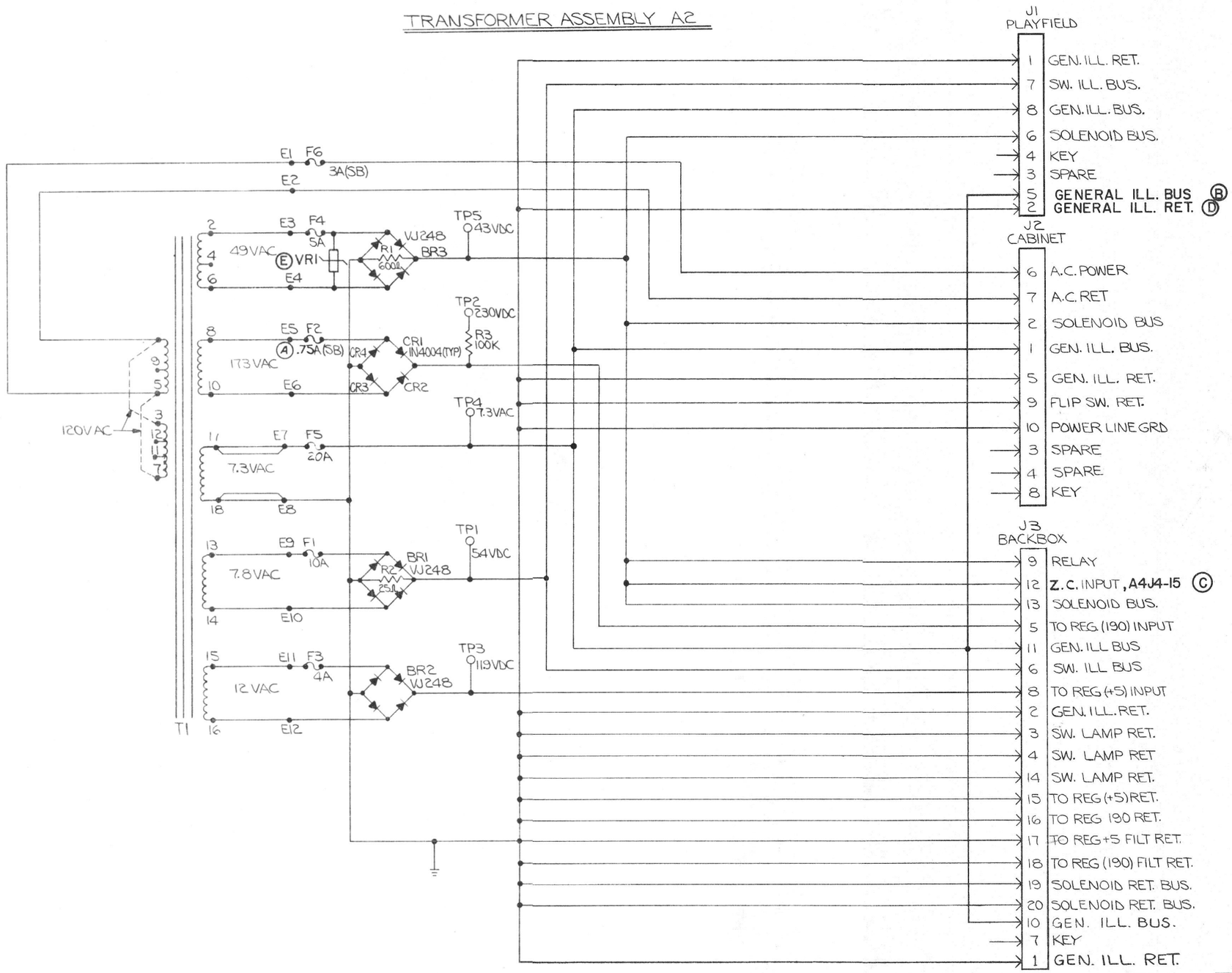

NOTES:

1. WIRE A.C. POWER AND TERMINALS PER TABLE 1.
2. VOLTAGES SHOWN ARE FOR GAME IN POWER-UP CONDITION.
3. PREFIX ALL REFERENCE DESIGNATIONS WITH A2.

TABLE 1
POWER LINE CONNECTIONS

LINE VOLTAGE VRMS A.C.	STRAP TERMINALS	APPLY POWER TO TERMINALS
115	1 TO 3 AND 9 TO 11	1 AND 9
120	1 TO 3 AND 5 TO 7	1 AND 5
220	3 TO 5	1 AND 12
240	3 TO 5	1 AND 7

NO.	LET.	CHANGE	DATE	BY	CK.
3	E	VR1 READ R3	11-2-78	MR	
2	D	J1-2 READ "GND"			
2	C	J3-12 READ "Z.C INPUT"			
1	B	ADDED JUMPER J1-5 TO J3-1			
1	A	F2 WAS 5.0A			

OPER.	DEPT.	DESCRIPTION	TOOL No.

DIETZGEN 196H

DIE SIZE — C.C. — FT. PER M — LBS. PER M —

REMOVE ALL BURRS

TOLERANCES ON DIMENSIONS UNLESS OTHERWISE SPECIFIED
FRACTIONS ±
DECIMALS ±
ANGLES ±

DO NOT SCALE DRAWING

DR. BY DATE 2-11-78
CK. BY DATE 2-11-78
AP'D BY DATE
PROT. BY DATE 2/11/77
FINISH:
HARDENING:

Bally MANUFACTURING CORP.
2640 BELMONT AVENUE
CHICAGO, ILLINOIS
FEB 21 1977
1074-E

PRINT CONTROL | PROD. COST. | PUR. DEPT. | ENG. FILE | TOOL DESIG. | COST DEPT. | ING. DEP. | TOOL DEP. | MACH. DEP. | TOTAL | SCALE

NAME: POWER TRANSFORMER MODULE SCHEMATIC
MATERIAL
ASSEM. NO. USED ON/W
PART NO. W-1185-1c

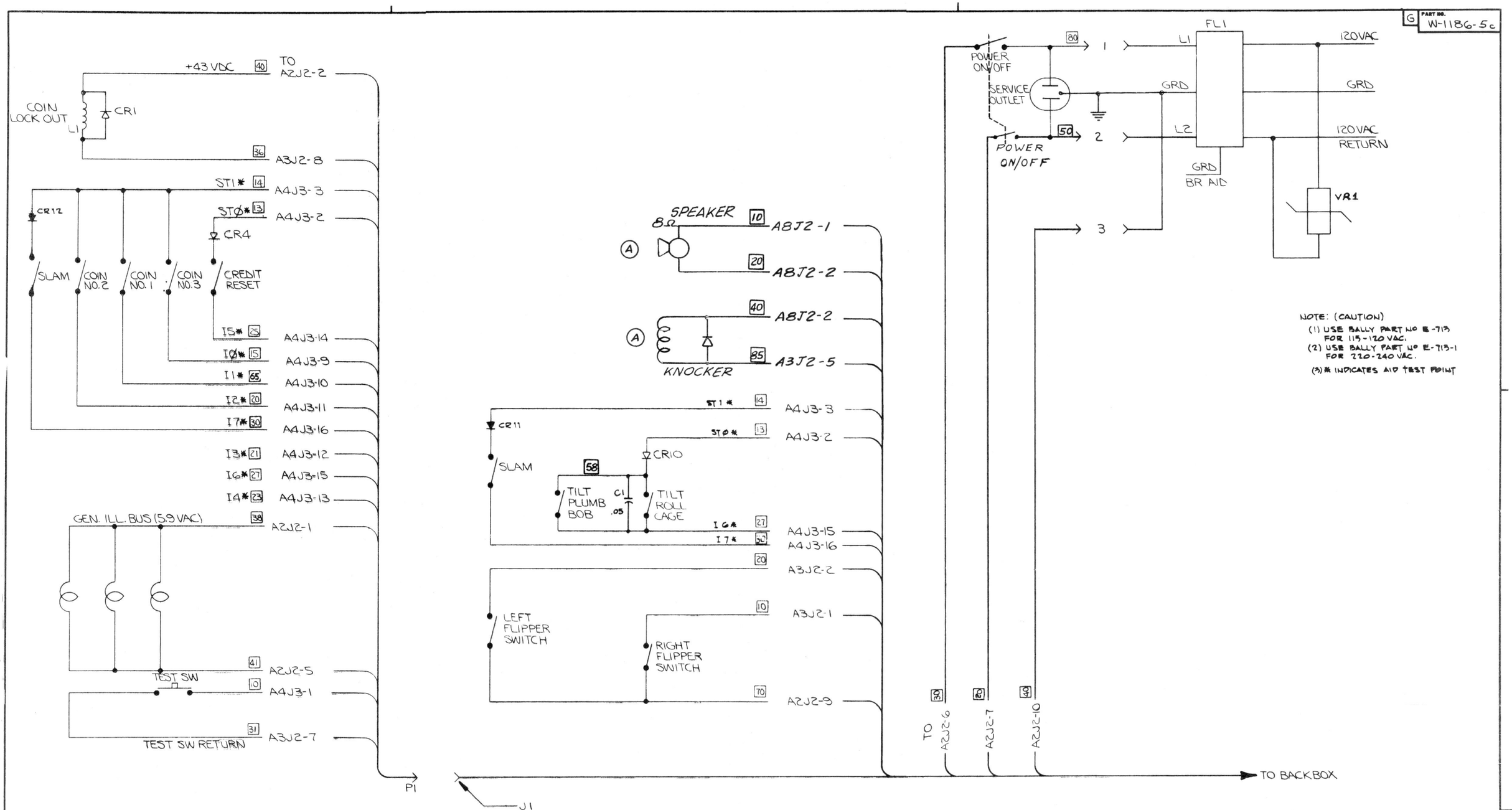

NOTE: (CAUTION)
(1) USE BALLY PART NO E-713 FOR 115-120 VAC.
(2) USE BALLY PART NO E-713-1 FOR 220-240 VAC.
(3) * INDICATES AID TEST POINT

TO	J1 PIN	TO	J1 PIN
A4J3-8	1	A4J3-3	11
A4J3-10	2	A2J2-2	15
A4J3-11	3	A3J2-8	16
A4J3-12	4	A2J2-1	17
A4J3-13	5	A2J2-5	18
A4J3-14	6	A4J3-1	19
A4J3-15	7	A3J2-7	20
A4J3-16	8		
A4J3-2	10		

DOOR PLUG

A7 CABINET ASSY. WIRING

NOTE: - DIODES ARE IN4004, (E-587-6)

NO.	LET.	CHANGE	DATE	BY	CK.
1	A	ADDED S.P. & KNOCKER	6-8-78	S.T.	

OPER.	DEPT.	DESCRIPTION	TOOL No.

DIE SIZE — C.C. — FT: PER M — LBS: PER M —

REMOVE ALL BURRS
TOLERANCES ON DIMENSIONS UNLESS OTHERWISE SPECIFIED
FRACTIONS ±
DECIMALS ±
ANGLES ±
DO NOT SCALE DRAWING

	DATE
DR. BY	
CH. BY J.D.	DATE 2-3-78
APD BY	DATE
APD BY	DATE
FINISH:	
HARDENING:	

Bally MANUFACTURING CORP.
2640 BELMONT AVENUE
CHICAGO, ILLINOIS

1112-E

PRINT CONTROL	FRACT.	DEC.	FT.	ANGL. DECIM.	SQ.	DIA.	TEMP.	"MIN"		TOTAL	SCALE
→											~

NAME WIRING DIAGRAM ELECTRONIC

ASSEM. NO. USED ON/W

MATERIAL

PART NO. W-1186-5c

W-1187-7 c

TABLE A A1J2

FROM	PIN	WIRE
A2J3-6	1	20
A5J2-14	2	12
A2J3-2	3	50
A2J3-11	4	10
A5J2-23	5	97
A5J2-15	6	32
A5J2-22	7	62
A5J2-8	8	93
A5J2-1	9	60
A5J2-2	10	20
A5J2-11	11	95
A5J2-21	12	47
A5J2-10	13	98
A5J2-7	14	91
A5J2-6	15	85
A5J2-20	16	35
A5J2-16	17	34
A2J3-1	18	40
A2J3-10	19	70
A5J2-13	20	53
A5J2-12	21	61
A5J2-4	22	72
A5J2-3	23	84
	24	

INSERT TO BACK CAB. PLUG

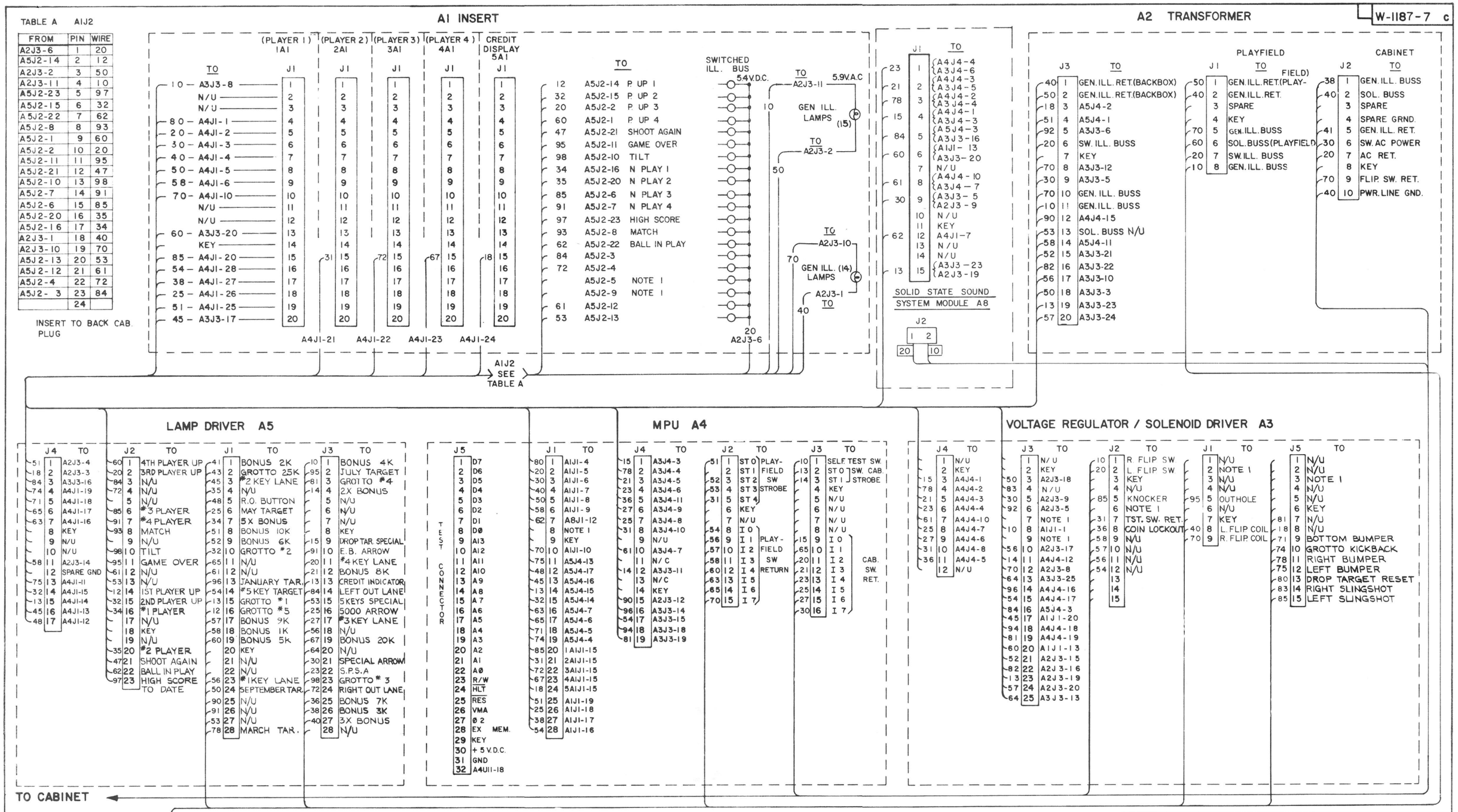

NOTES

1. THESE PINS ARE RESERVED FOR FUTURE USE.
2. WIRE COLORS ARE SHOWN FOR ALL CONNECTOR PINS, SOME WIRES MAY NOT BE USED IN ALL GAMES.
3. ✱ INDICATES AID TEST POINT.

WIRE COLOR CODE	
1-RED	6-BROWN
2-BLUE	7-ORANGE
3-YELLOW	8-BLACK
4-GREEN	9-GRAY
5-WHITE	0-NO TRACE

LET	CHANGE	DATE	BY	CK

REMOVE ALL BURRS

TOLERANCES ON DIMENSIONS UNLESS OTHERWISE SPECIFIED
FRACTIONS ± 1/64
DECIMALS ± .005
ANGLES ± 1°

DO NOT SCALE DRAWING

DR. BY | DATE
CK. BY | DATE
APP'D BY J.D. | DATE 5-30-78
APP'D BY DGM | DATE 8-10-78
FINISH
HARDENING

© Bally MANUFACTURING CORP.
2640 BELMONT AVENUE
CHICAGO, ILLINOIS

1116-E

PRINT CONTROL | TOTAL | SCALE

NAME: PLUG CONNECTORS
ASSEM NO USED ON W
MATERIAL: PLAYBOY
PART NO W-1187-7c

STANPAT PRODUCTS INC PORT WASHINGTON, N.Y.

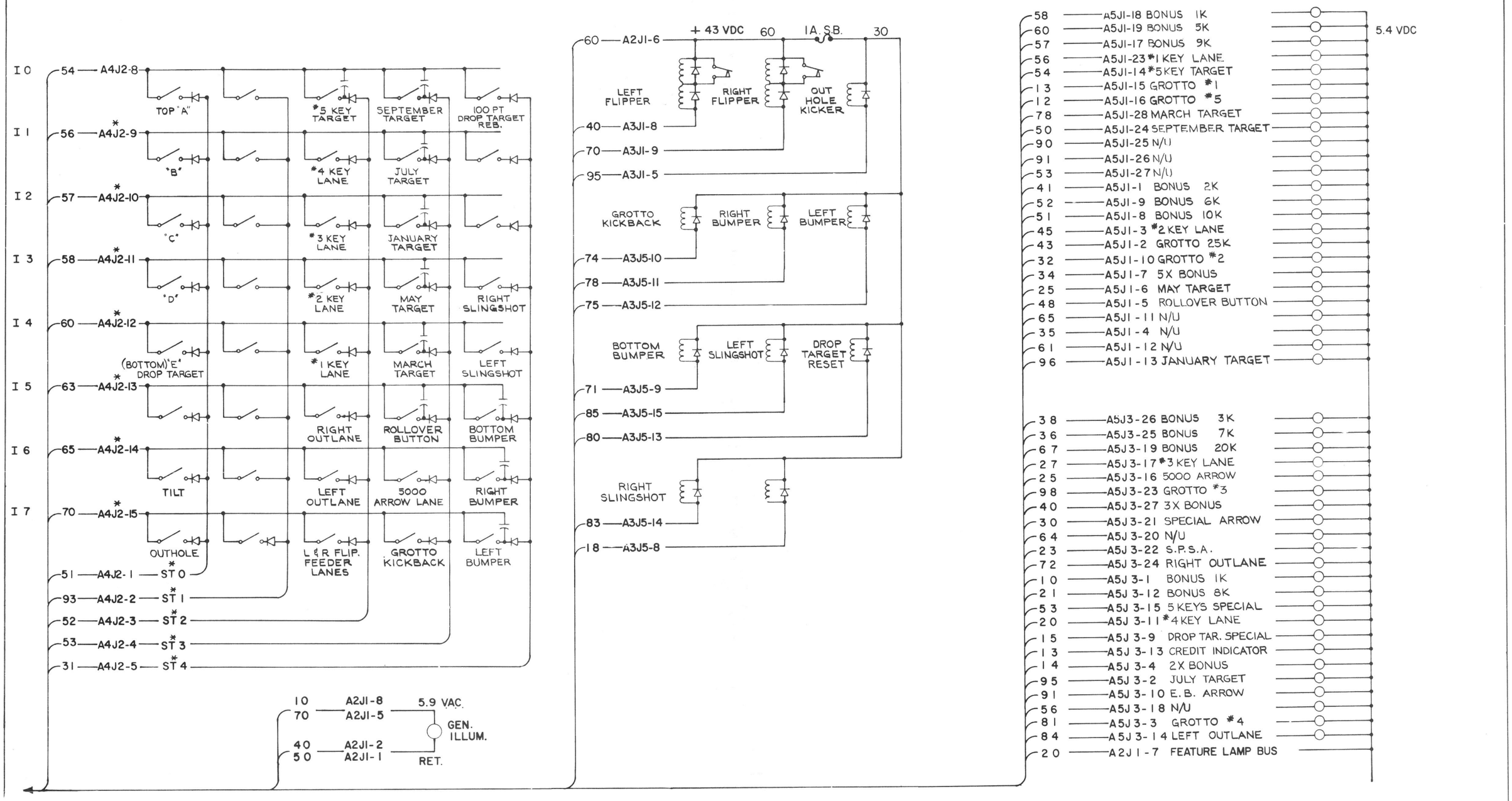

PLAYFIELD A6

NOTES

1. INDICATES NOT USED
2. N/U = NOT USED ON PLAYFIELD
3. * INDICATES AID TEST POINT
4. ALL DIODES ARE IN4004, (E-587-6)
   ALL CAPACITORS ARE .05 MFD. (E-586-80)

LET.	CHANGE	DATE	BY	CK

REMOVE ALL BURRS

TOLERANCES ON DIMENSIONS UNLESS OTHERWISE SPECIFIED
FRACTIONS ± 1/64
DECIMALS ± .005
ANGLES ± 1°

DO NOT SCALE DRAWING

DR. BY E.V.	DATE 5-27-78	Bally MANUFACTURING CORP. 2640 BELMONT AVENUE CHICAGO, ILLINOIS	1116-E
CK. BY	DATE		
APD BY J.D.	DATE 5-30-78	PRINT CONTROL →	TOTAL / SCALE
APD BY DWM	DATE 8-10-78	NAME SWITCH MATRIX	ASSEM. NO. USED ON N
FINISH:		MATERIAL PLAYBOY	PART NO. W-1192-7 c
HARDENING:			

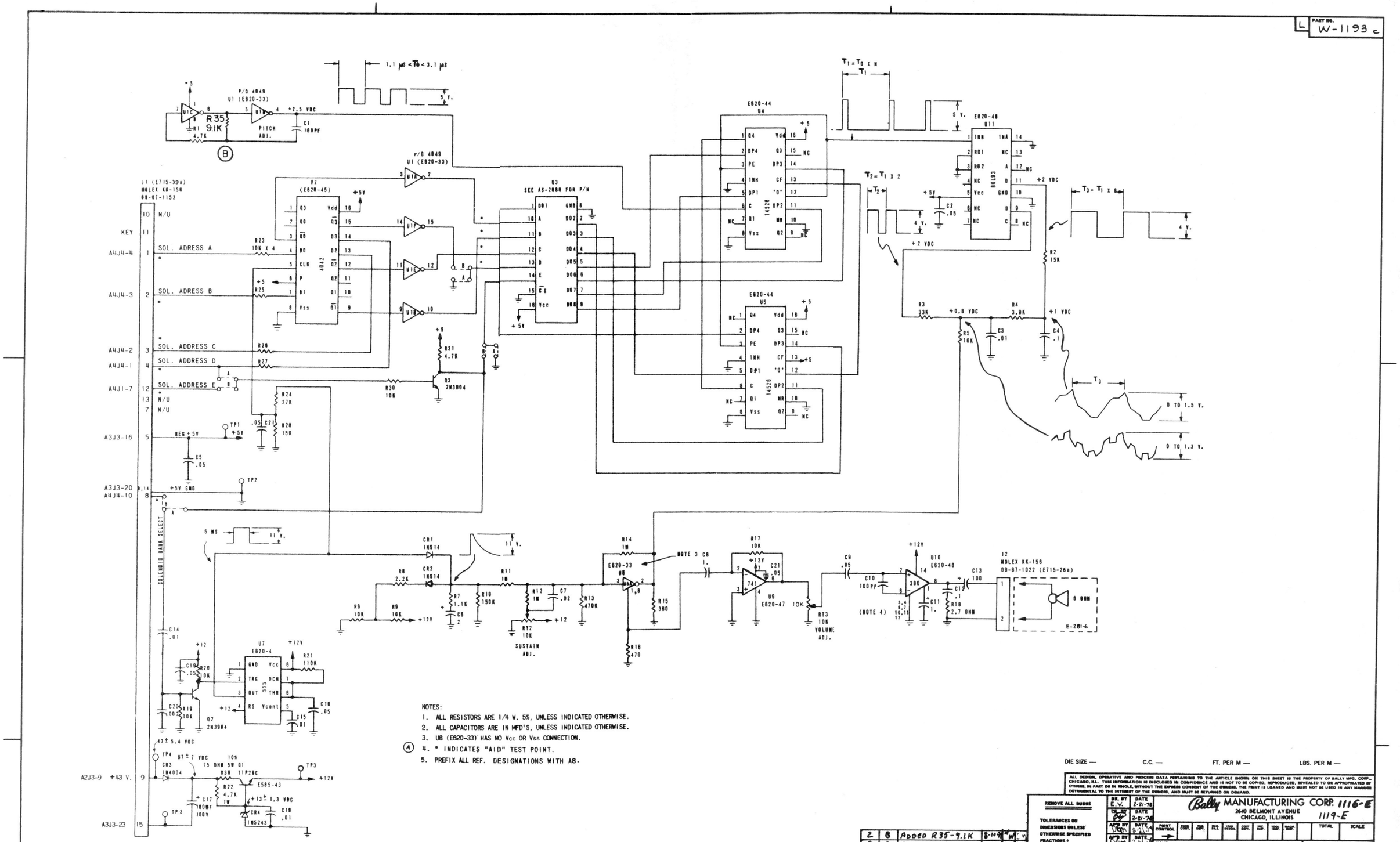

NOTES:

1. ALL RESISTORS ARE 1/4 W. 5%, UNLESS INDICATED OTHERWISE.
2. ALL CAPACITORS ARE IN MFD'S, UNLESS INDICATED OTHERWISE.
3. U8 (E820-33) HAS NO Vcc OR Vss CONNECTION.
4. * INDICATES "AID" TEST POINT.
5. PREFIX ALL REF. DESIGNATIONS WITH A8.

NO.	LET.	CHANGE	DATE	BY	CK.
2	B	ADDED R35-9.1K	8-10-78		
2	B	REMOVED RT1-10K	8-10-78		
2	B	" R29-1K	8-10-78		
1	A	ADDED NOTE 4	6-8-78	S.T.	T.D.

OPER.	DEPT.	DESCRIPTION	TOOL No.

DIETZGEN 1944

DIE SIZE — C.C. — FT. PER M — LBS. PER M —

REMOVE ALL BURRS

TOLERANCES ON DIMENSIONS UNLESS OTHERWISE SPECIFIED
FRACTIONS ±
DECIMALS ±
ANGLES ±

DO NOT SCALE DRAWING

		DATE
DR. BY	E.V.	2-21-78
CK. BY		2-21-78
APP. BY		2-21-78
APP. BY		2-21-78

FINISH:

HARDWARE:

Bally MANUFACTURING CORP. 1116-E 1119-E
2640 BELMONT AVENUE
CHICAGO, ILLINOIS

POINT CONTROL → | PROD. | QUAL. | PUR. | ENGG. MGR. | SALES | QUALITY | PROD. | TOOL | MAINT. | | TOTAL | SCALE

NAME: SOLID STATE SOUND MODULE A8

ASSEM. NO. USED ON/IN: AS-2518-32

MATERIAL:

PART NO. W-1193 c