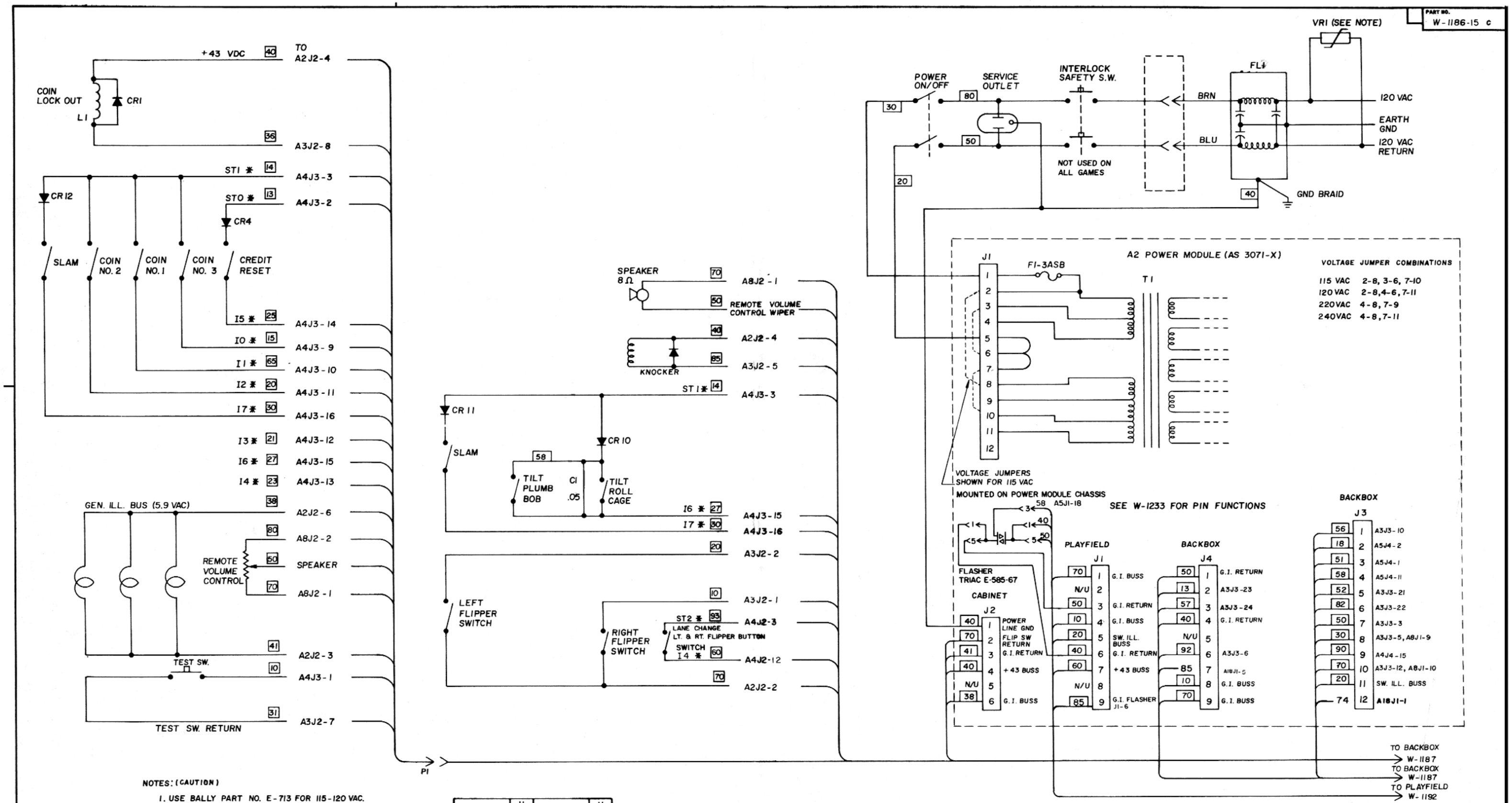

NOTES: (CAUTION)

1. USE BALLY PART NO. E-713 FOR 115-120 VAC.
2. USE BALLY PART NO. E-713-1 FOR 220-240 VAC.
3. * INDICATES AID TEST POINT.

TO	J1 PIN	TO	J1 PIN
A4J3-9	1	A4J3-3	11
A4J3-10	2	A2J2-4	15
A4J3-11	3	A3J2-8	16
A4J3-12	4	A2J2-6	17
A4J3-13	5	A2J2-3	18
A4J3-14	6	A4J3-1	19
A4J3-15	7	A3J2-7	20
A4J3-16	8	SPEAKER	9
A4J3-2	10	A8J2-1	12
		A8J2-2	13

DOOR PLUG

A7 CABINET ASS'Y. WIRING

NOTE: DIODES ARE IN4004, (E-807-6)

ALL DESIGN OPERATIVE AND PROCESS DATA PERTAINING TO THE ARTICLE SHOWN ON THIS SHEET IS THE PROPERTY OF BALLY MFG. CORP. CHICAGO, ILL. THIS INFORMATION IS DISCLOSED IN CONFIDENCE AND IS NOT TO BE COPIED, REPRODUCED, REVEALED TO OR APPROPRIATED BY OTHERS IN PART OR IN WHOLE WITHOUT THE EXPRESS CONSENT OF THE OWNERS. THE PRINT IS LOANED AND MUST NOT BE USED IN ANY MANNER DETRIMENTAL TO THE INTEREST OF THE OWNERS AND MUST BE RETURNED ON DEMAND.

NO.	LET.	CHANGE	DATE	BY

REMOVE ALL BURRS. TOLERANCES ON DIMENSIONS UNLESS OTHERWISE SPECIFIED FRACTIONS ± .008 DECIMALS ± .003 EXCEPT HOLE DIA. ± .002 ANGLES ± 1/2° DO NOT SCALE DRAWING

DR. BY / DATE; CK. BY / DATE; AP'D BY / DATE; AP'D BY / DATE; FINISH: ; HARDENING:

Bally MANUFACTURING CORP. 2640 BELMONT AVENUE CHICAGO, ILLINOIS #1239

PRINT CONTROL | DIE SIZE | C.C. | FT. PER M. | LBS. PER M.

NAME: WIRING DIAGRAM - CABINET | ASSEM. NO. USED | SCALE

MATERIAL: CENTAUR | CODE | PART NO. W-1186-15 c

OPER.	DEPT.	DESCRIPTION	TOOL NO.

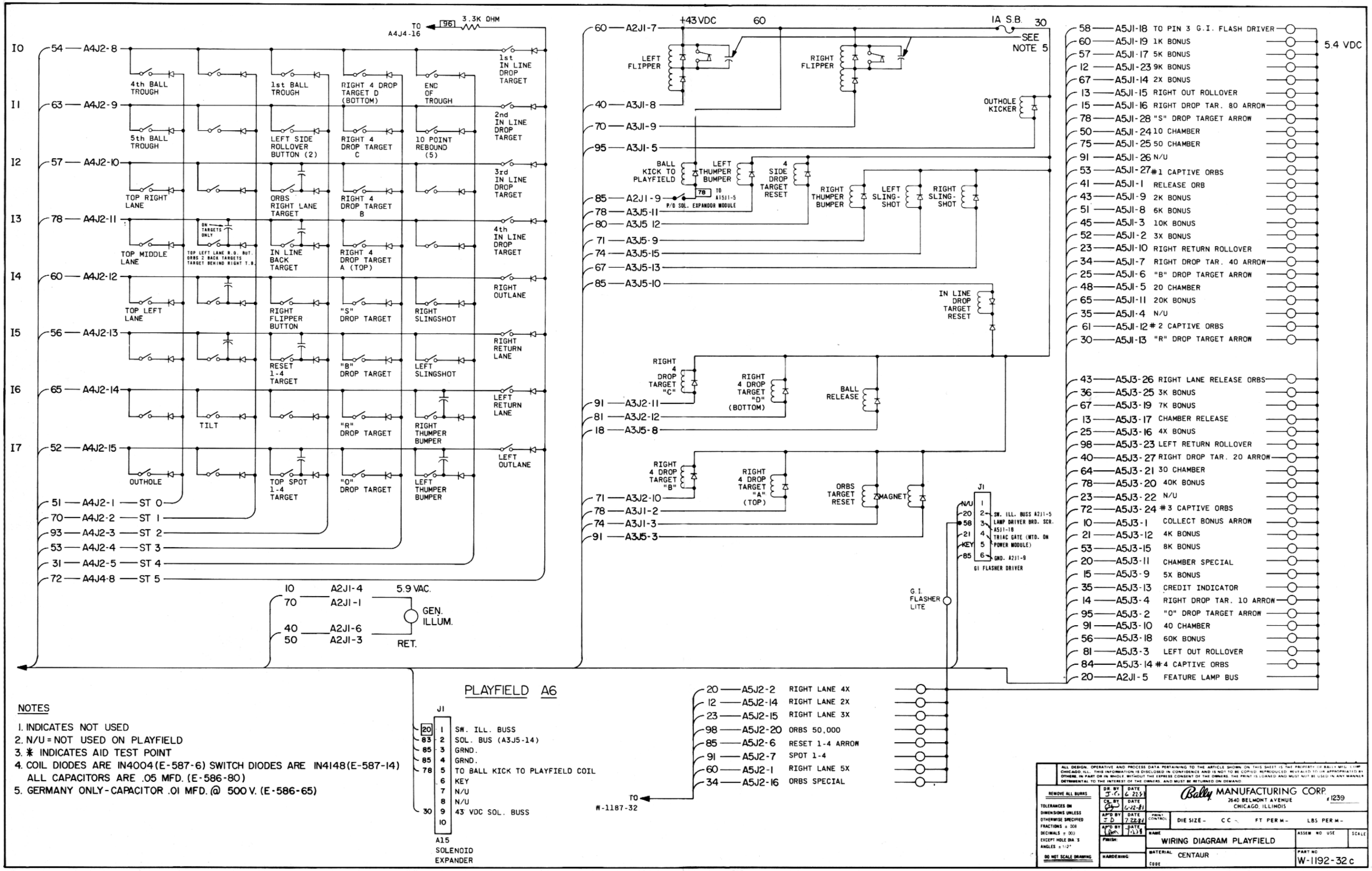
TO A4J4-16
96
3.3K OHM
I0 54 A4J2-8
I1 63 A4J2-9
I2 57 A4J2-10
I3 78 A4J2-11
I4 60 A4J2-12
I5 56 A4J2-13
I6 65 A4J2-14
I7 52 A4J2-15
51 A4J2-1 ST 0
70 A4J2-2 ST 1
93 A4J2-3 ST 2
53 A4J2-4 ST 3
31 A4J2-5 ST 4
72 A4J4-8 ST 5
4th BALL TROUGH
1st BALL TROUGH
RIGHT 4 DROP TARGET D (BOTTOM)
END OF TROUGH
1st IN LINE DROP TARGET
5th BALL TROUGH
LEFT SIDE ROLLOVER BUTTON (2)
RIGHT 4 DROP TARGET C
10 POINT REBOUND (5)
2nd IN LINE DROP TARGET
TOP RIGHT LANE
ORBS RIGHT LANE TARGET
RIGHT 4 DROP TARGET B
3rd IN LINE DROP TARGET
TOP MIDDLE LANE
ON TARGETS ONLY
TOP LEFT LANE R.O. BUT ORBS 2 BACK TARGETS TARGET BEHIND RIGHT T.B.
IN LINE BACK TARGET
RIGHT 4 DROP TARGET A (TOP)
4th IN LINE DROP TARGET
TOP LEFT LANE
RIGHT FLIPPER BUTTON
"S" DROP TARGET
RIGHT SLINGSHOT
RIGHT OUTLANE
RESET 1-4 TARGET
"B" DROP TARGET
LEFT SLINGSHOT
RIGHT RETURN LANE
TILT
"R" DROP TARGET
RIGHT THUMPER BUMPER
LEFT RETURN LANE
OUTHOLE
TOP SPOT 1-4 TARGET
"O" DROP TARGET
LEFT THUMPER BUMPER
LEFT OUTLANE
10 A2J1-4
70 A2J1-1
40 A2J1-6
50 A2J3-3
5.9 VAC.
GEN. ILLUM.
RET.
60 A2J1-7
+43 VDC
60
1A S.B.
30
SEE NOTE 5
LEFT FLIPPER
RIGHT FLIPPER
40 A3J1-8
70 A3J1-9
95 A3J1-5
OUTHOLE KICKER
BALL KICK TO PLAYFIELD
LEFT THUMPER BUMPER
4 SIDE DROP TARGET RESET
85 A2J1-9
78 A3J5-11
80 A3J5 12
71 A3J5-9
74 A3J5-15
67 A3J5-13
85 A3J5-10
78
TO A15J1-5
P/O SOL. EXPANDOR MODULE
RIGHT THUMPER BUMPER
LEFT SLING-SHOT
RIGHT SLING-SHOT
IN LINE DROP TARGET RESET
RIGHT 4 DROP TARGET "C"
RIGHT 4 DROP TARGET "D" (BOTTOM)
BALL RELEASE
91 A3J2-11
81 A3J2-12
18 A3J5-8
RIGHT 4 DROP TARGET "B"
RIGHT 4 DROP TARGET "A" (TOP)
ORBS TARGET RESET
MAGNET
71 A3J2-10
78 A3J1-2
74 A3J1-3
91 A3J5-3
J1
N/U 1
20 2 SW. ILL. BUSS A2J1-5
58 3 LAMP DRIVER BRD. SCR. A5J1-18
21 4 TRIAC GATE (MTD. ON POWER MODULE)
KEY 5
85 6 GND. A2J1-9
GI FLASHER DRIVER
G.I. FLASHER LITE
58 A5J1-18 TO PIN 3 G.I. FLASH DRIVER
60 A5J1-19 1K BONUS
57 A5J1-17 5K BONUS
12 A5J1-23 9K BONUS
67 A5J1-14 2X BONUS
13 A5J1-15 RIGHT OUT ROLLOVER
15 A5J1-16 RIGHT DROP TAR. 80 ARROW
78 A5J1-28 "S" DROP TARGET ARROW
50 A5J1-24 10 CHAMBER
75 A5J1-25 50 CHAMBER
91 A5J1-26 N/U
53 A5J1-27 #1 CAPTIVE ORBS
41 A5J1-1 RELEASE ORB
43 A5J1-9 2K BONUS
51 A5J1-8 6K BONUS
45 A5J1-3 10K BONUS
52 A5J1-2 3X BONUS
23 A5J1-10 RIGHT RETURN ROLLOVER
34 A5J1-7 RIGHT DROP TAR. 40 ARROW
25 A5J1-6 "B" DROP TARGET ARROW
48 A5J1-5 20 CHAMBER
65 A5J1-11 20K BONUS
35 A5J1-4 N/U
61 A5J1-12 #2 CAPTIVE ORBS
30 A5J1-13 "R" DROP TARGET ARROW
5.4 VDC
43 A5J3-26 RIGHT LANE RELEASE ORBS
36 A5J3-25 3K BONUS
67 A5J3-19 7K BONUS
13 A5J3-17 CHAMBER RELEASE
25 A5J3-16 4X BONUS
98 A5J3-23 LEFT RETURN ROLLOVER
40 A5J3-27 RIGHT DROP TAR. 20 ARROW
64 A5J3-21 30 CHAMBER
78 A5J3-20 40K BONUS
23 A5J3-22 N/U
72 A5J3-24 #3 CAPTIVE ORBS
10 A5J3-1 COLLECT BONUS ARROW
21 A5J3-12 4K BONUS
53 A5J3-15 8K BONUS
20 A5J3-11 CHAMBER SPECIAL
15 A5J3-9 5X BONUS
35 A5J3-13 CREDIT INDICATOR
14 A5J3-4 RIGHT DROP TAR. 10 ARROW
95 A5J3-2 "O" DROP TARGET ARROW
91 A5J3-10 40 CHAMBER
56 A5J3-18 60K BONUS
81 A5J3-3 LEFT OUT ROLLOVER
84 A5J3-14 #4 CAPTIVE ORBS
20 A2J1-5 FEATURE LAMP BUS
PLAYFIELD A6
J1
20 1 SW. ILL. BUSS
83 2 SOL. BUS (A3J5-14)
85 3 GRND.
85 4 GRND.
78 5 TO BALL KICK TO PLAYFIELD COIL
6 KEY
7 N/U
8 N/U
30 9 43 VDC SOL. BUSS
10
A15 SOLENOID EXPANDER
20 A5J2-2 RIGHT LANE 4X
12 A5J2-14 RIGHT LANE 2X
23 A5J2-15 RIGHT LANE 3X
98 A5J2-20 ORBS 50,000
85 A5J2-6 RESET 1-4 ARROW
91 A5J2-7 SPOT 1-4
60 A5J2-1 RIGHT LANE 5X
34 A5J2-16 ORBS SPECIAL
TO W-1187-32
NOTES
1. INDICATES NOT USED
2. N/U = NOT USED ON PLAYFIELD
3. ✱ INDICATES AID TEST POINT
4. COIL DIODES ARE IN4004 (E-587-6) SWITCH DIODES ARE IN4148 (E-587-14)
ALL CAPACITORS ARE .05 MFD. (E-586-80)
5. GERMANY ONLY - CAPACITOR .01 MFD. @ 500 V. (E-586-65)
ALL DESIGN, OPERATIVE AND PROCESS DATA PERTAINING TO THE ARTICLE SHOWN ON THIS SHEET IS THE PROPERTY OF BALLY MFG. CORP. CHICAGO, ILL. THIS INFORMATION IS DISCLOSED IN CONFIDENCE AND IS NOT TO BE COPIED, REPRODUCED, REVEALED TO OR APPROPRIATED BY OTHERS, IN PART OR IN WHOLE WITHOUT THE EXPRESS CONSENT OF THE OWNERS. THE PRINT IS LOANED AND MUST NOT BE USED IN ANY MANNER DETRIMENTAL TO THE INTEREST OF THE OWNERS, AND MUST BE RETURNED ON DEMAND.
REMOVE ALL BURRS
TOLERANCES ON DIMENSIONS UNLESS OTHERWISE SPECIFIED FRACTIONS ± .008 DECIMALS ± .003 EXCEPT HOLE DIA'S ANGLES ± 1/2°
DO NOT SCALE DRAWING
DR. BY J.C. DATE 6-22-81
CK. BY DATE 6-22-81
APP'D BY J.D. DATE 7-22-81
APP'D BY DATE 7-23-81
FINISH:
HARDENING:
Bally MANUFACTURING CORP.
2640 BELMONT AVENUE
CHICAGO, ILLINOIS
#1239
PRINT CONTROL
DIE SIZE - CC - FT PER M - LBS PER M -
NAME WIRING DIAGRAM PLAYFIELD
ASSEM NO USE
SCALE
MATERIAL CENTAUR
CODE
PART NO W-1192-32 c

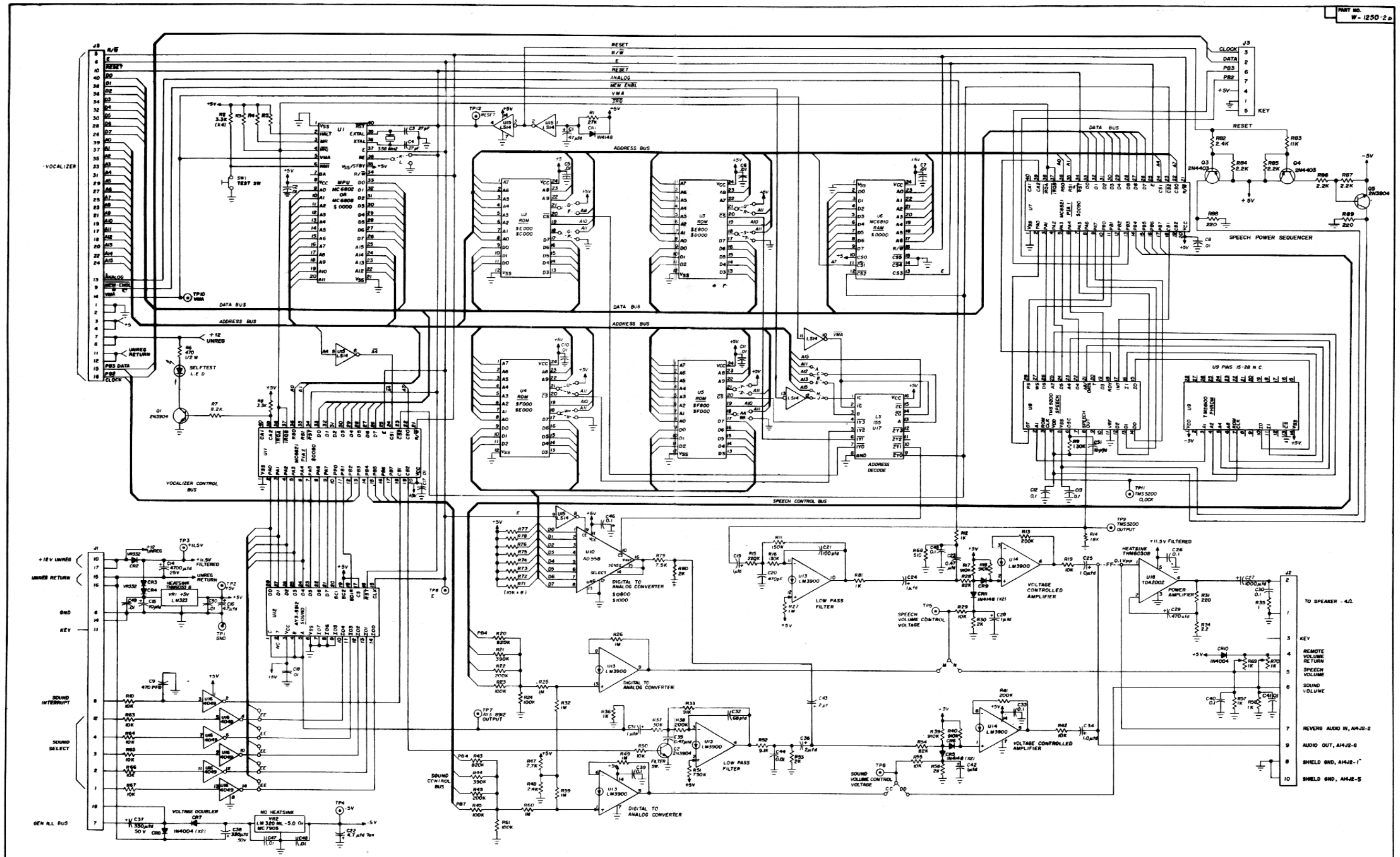

NOTES:

1. UNLESS OTHERWISE INDICATED ALL RESISTOR VALUES ARE IN OHMS.

LAST NUMBERS USED

R89
C51
CR10
U18
VR2
Q5
TP12
FF

SQUAWK & TALK TEST POINTS

TP1 - GND
TP2 - +5VDC
TP3 - +11.5VDC
TP4 - -5VDC
TP5 - SPEECH VOLUME CONTROL VOLTAGE
TP6 - SOUND VOLUME CONTROL VOLTAGE
TP7 - AY3-8912 OUTPUT
TP8 E PULSE
TP9 - TMS 5200 OUTPUT
TP10 - VMA
TP11 - TMS 5200 CLOCK
TP12 - RESET

SQUAWK & TALK JUMPERS

PROM	ROM	JUMPERS
2716	3316	A,B,D,N,T,U,Y,X,BB
2532	9332	C,E,G,O,S,U,W,Y,AA

NO VOCALIZER H
WITH VOCALIZER J
6808 MPU L (WITH 6810 RAM)
6802 MPU K (NO 6810 RAM)
NO AY3-8912 EE
NO "SAY IT AGAIN" FF

	SPEECH	SOUND
COMPUTER VOLUME CONTROL	CC	M
REMOTE VOLUME CONTROL	DD	N

Williams MANUFACTURING CORP.
3401 BELMONT AVENUE
CHICAGO, ILLINOIS
1259

NAME: SQUAWK & TALK SCHEMATIC A8
ASSIGN NO USED: A8-2518-6B
PART NO. W-1250-2 E

W-1187-32 c

TABLE A A1J2

FROM	PIN	WIRE
A2J3-11	1	20
A5J2-14	2	12
A2J4-1	3	50
A2J4-8	4	10
A5J2-23	5	97
A5J2-15	6	23
A5J2-22	7	62
A5J2-8	8	70
A5J2-1	9	60
A5J2-2	10	20
A5J2-11	11	95
A5J2-21	12	47
A5J2-10	13	35
A5J2-7	14	91
A5J2-6	15	85
A5J2-20	16	98
A5J2-16	17	34
A2J4-4	18	40
A2J4-9	19	70
A5J2-13	20	
A4J4-5	21	72
A5J2-9	22	75
A4J4-16	23	96
A8J1-7	24	70

INSERT TO BACK CAB PLUG

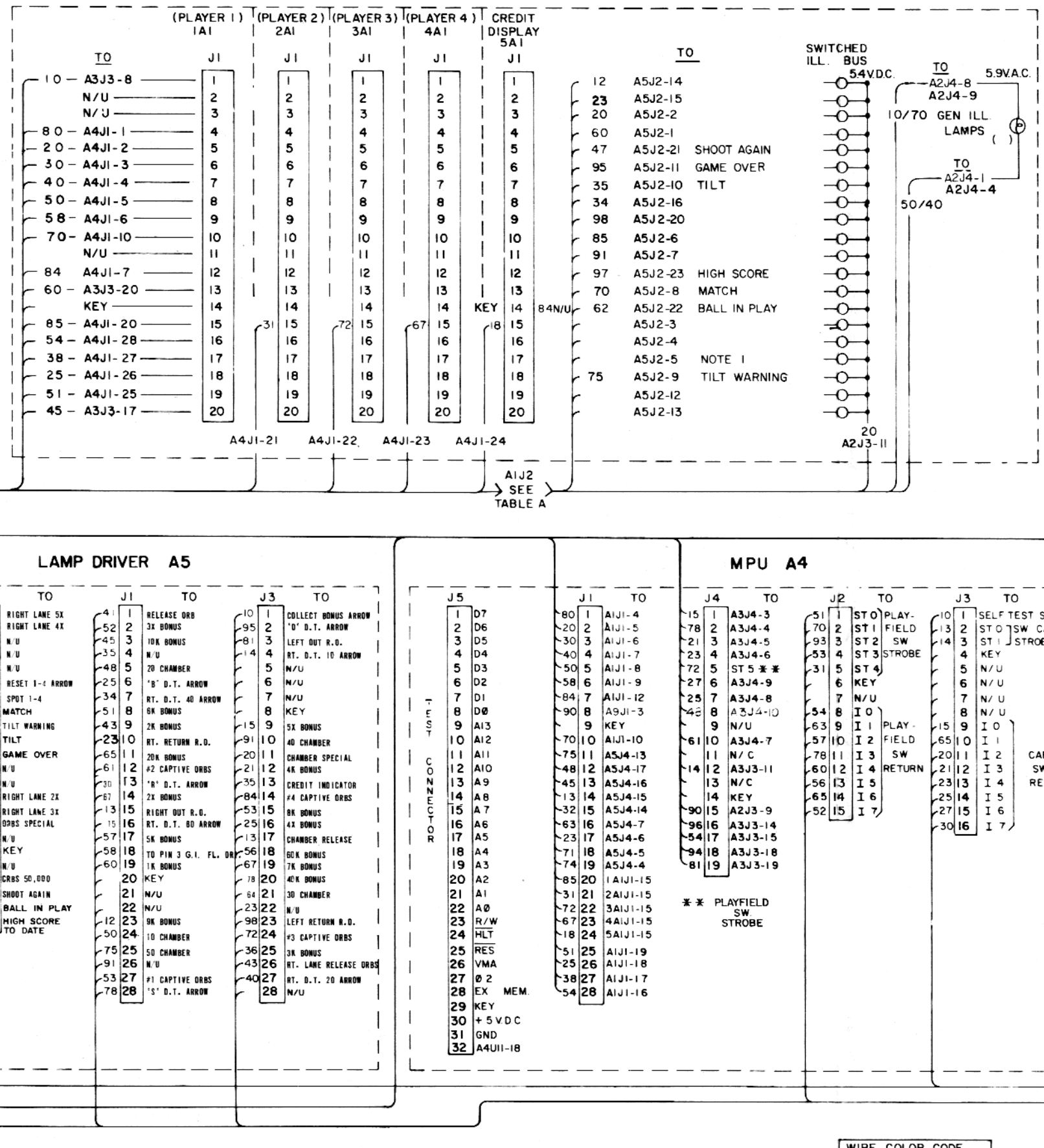

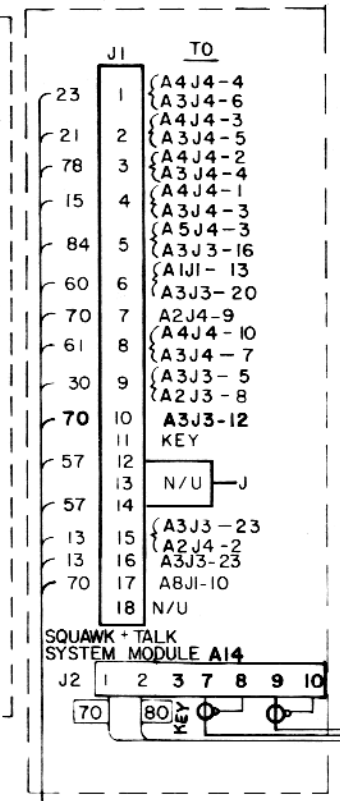

24 PIN PLUG		
FROM	PIN	WIRE
A2J4-4	1	40
A2J4-1	2	50
A2J3-2	3	18
A2J3-3	4	51
A2J4-6	5	92
A2J3-11	6	20
A2J3-10	7	70
A2J3-8	8	30
A2J4-9	9	70
A2J4-8	10	10
A2J3-9	11	90
A2J3-4	12	58
A2J3-5	13	52
A2J3-6	14	82
A2J3-1	15	56
A2J3-7	16	50
A2J4-2	17	13
A2J4-3	18	57
A2J3-12	23	74
A2J4-7	24	85
CABINET TO BACK BOX		

12 PIN PLUG		
FROM	PIN	WIRE
A9J3-10	1	25
A9J3-14	2	27
A9J2-13	3	40
A9J2-17	4	43
A9J2-6	5	45
A9J2-9	6	54
A9J2-5	7	60
A9J2-12	8	62
A9J3-7	9	82
A9J3-4	10	95
A9J3-13	11	96
	12	
PANEL TO BACK BOX		

12 PIN PLUG		
FROM	PIN	WIRE
A5J2-14	1	12
A5J2-2	2	20
A5J2-15	3	23
A5J2-16	4	34
A5J2-1	5	60
A4J4-5	6	72
A5J2-6	7	85
A5J2-7	8	91
A4J4-16	9	96
A5J2-20	10	98
PANEL TO BACK BOX		

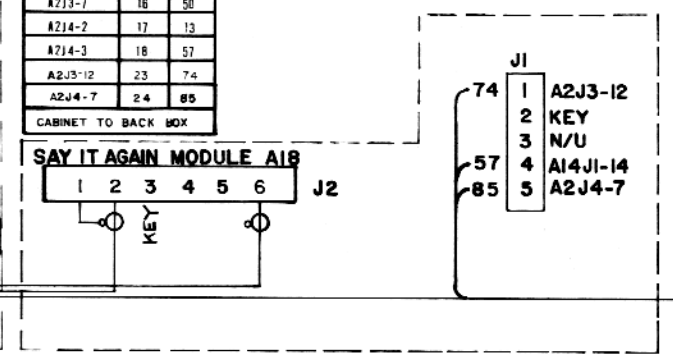

NOTES:

1. THESE PINS ARE RESERVED FOR FUTURE USE.
2. WIRE COLOR ARE SHOWN FOR ALL CONNECTOR PINS, SOME WIRE MAY NOT BE USED IN ALL GAMES.
3. ✱ INDICATES AID TEST POINT.

WIRE COLOR CODE	
1-RED	6-BROWN
2-BLUE	7-ORANGE
3-YELLOW	8-BLACK
4-GREEN	9-GRAY
5-WHITE	0-NO TRACE

REMOVE ALL BURRS

TOLERANCES ON DIMENSIONS UNLESS OTHERWISE SPECIFIED
FRACTIONS - ± 64
DECIMALS - 005
ANGLES - 1°

DO NOT SCALE DRAWING

DR. BY | DATE
CK. BY | DATE
APP'D BY | DATE
APP'D BY | DATE
FINISH
HARDENING

LET | CHANGE | DATE | BY | CK

Bally MANUFACTURING CORP
2640 BELMONT AVENUE
CHICAGO ILLINOIS

1239

NAME WIRING DIAGRAM BACKBOX

ASSEM NO | USED ON #

MATERIAL CENTAUR

PART NO W-1187-32c

TOTAL | SCALE

G PART NO W-1207-11 6

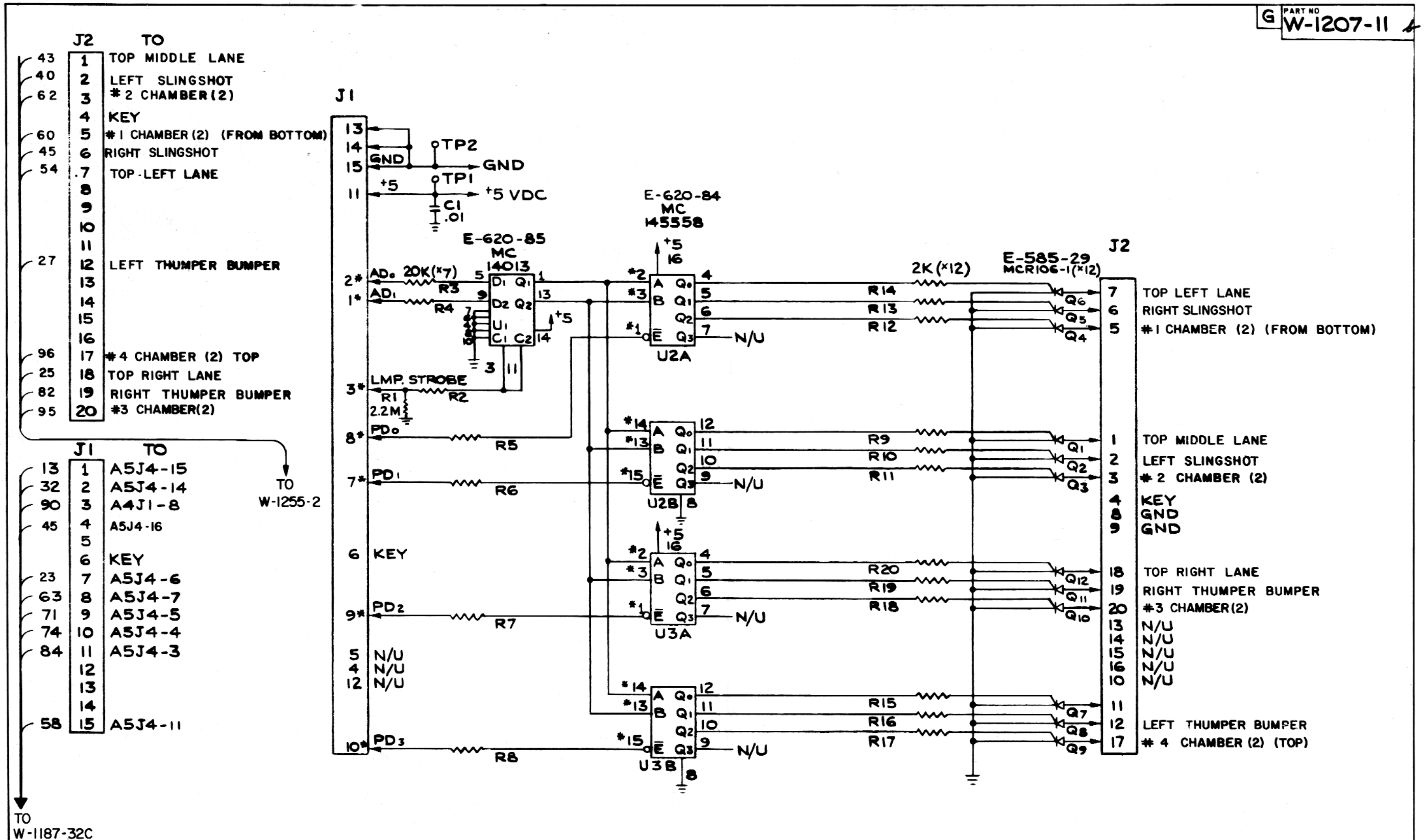

NOTES:

1. * INDICATES "AID" TEST POINT.
2. ALL RESISTORS ARE 1/4 W, ± 5%
3. VOLTAGES SHOWN ARE FOR A GAME UP CONDITION.
4. SCR'S ARE MCR-106-1, (E-585-29)
5. PREFIX ALL REFERENCE DESIGNATION WITH "A9".

ALL DESIGN, OPERATIVE AND PROCESS DATA PERTAINING TO THE ARTICLE SHOWN ON THIS SHEET IS THE PROPERTY OF BALLY MFG. CORP. CHICAGO, ILL. THIS INFORMATION IS DISCLOSED IN CONFIDENCE AND IS NOT TO BE COPIED, REPRODUCED, REVEALED TO OR APPROPRIATED BY OTHERS, IN PART OR IN WHOLE, WITHOUT THE EXPRESS CONSENT OF THE OWNERS. THE PRINT IS LOANED AND MUST NOT BE USED IN ANY MANNER DETRIMENTAL TO THE INTEREST OF THE OWNERS, AND MUST BE RETURNED ON DEMAND.

OPER.	DEPT.	DESCRIPTION	TOOL NO.

NO.	LET.	CHANGE	DATE	BY

REMOVE ALL BURRS

TOLERANCES ON DIMENSIONS UNLESS OTHERWISE SPECIFIED
FRACTIONS ± .008
DECIMALS ± .003
EXCEPT HOLE DIA ±
ANGLES ± 1/2°

DO NOT SCALE DRAWING

DR. BY A.V.	DATE 7-10-81	Bally MANUFACTURING CORP. 2640 BELMONT AVENUE CHICAGO, ILLINOIS #1239
CK. BY	DATE	
AP'D BY J.D	DATE 7-22-81	PRINT CONTROL
AP'D BY	DATE 7/22/81	NAME (A9) AUXILIARY LAMP DRIVER BOARD — ASSEM. NO. USED — SCALE ~
FINISH:		
HARDENING:		MATERIAL — CODE — PART NO. W-1207-11 6

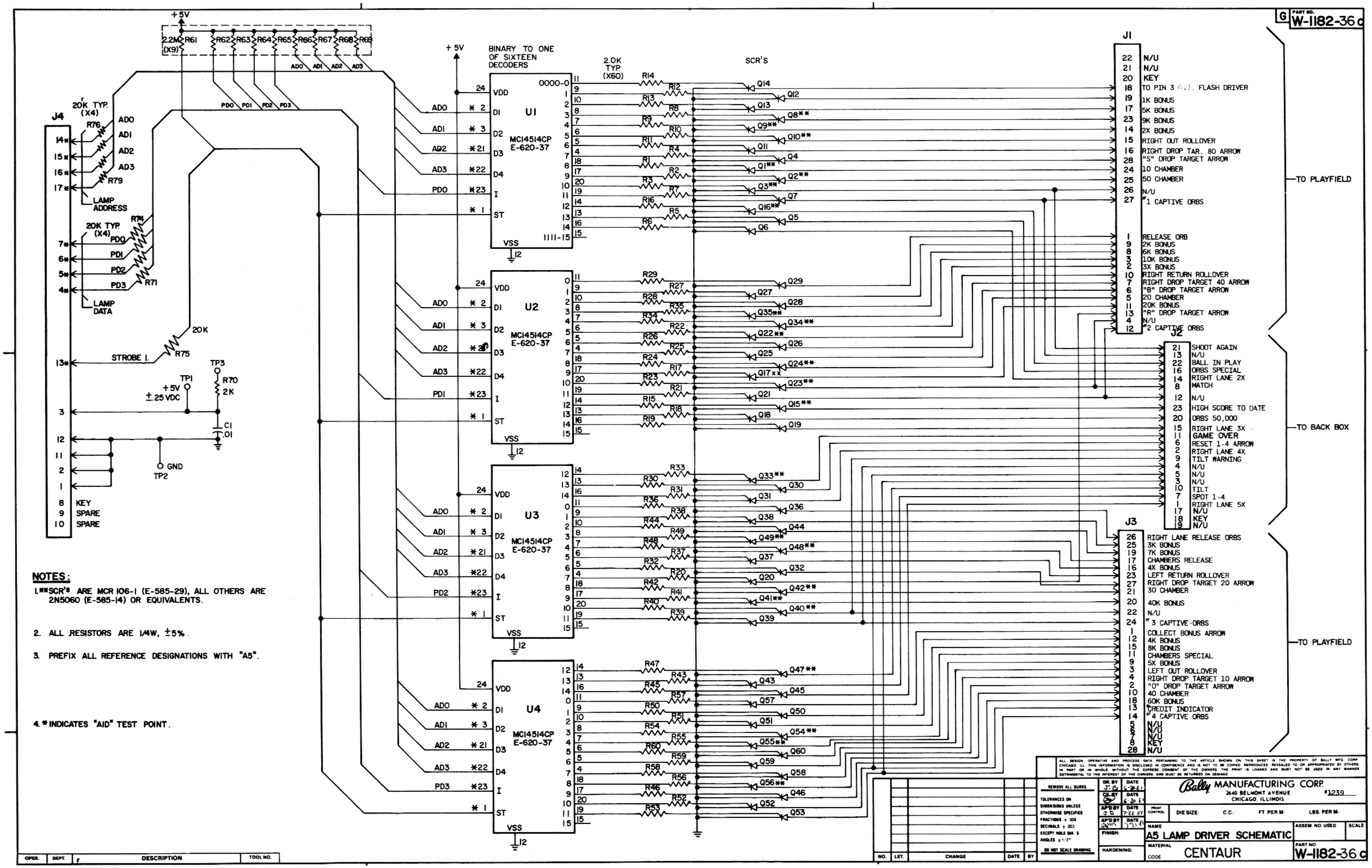

NOTES:

1. **SCR'S ARE MCR 106-1 (E-585-29), ALL OTHERS ARE 2N5060 (E-585-14) OR EQUIVALENTS.

2. ALL RESISTORS ARE 1/4W, ±5%.

3. PREFIX ALL REFERENCE DESIGNATIONS WITH "A5".

4. * INDICATES "AID" TEST POINT.

PART NO. W-1258 c

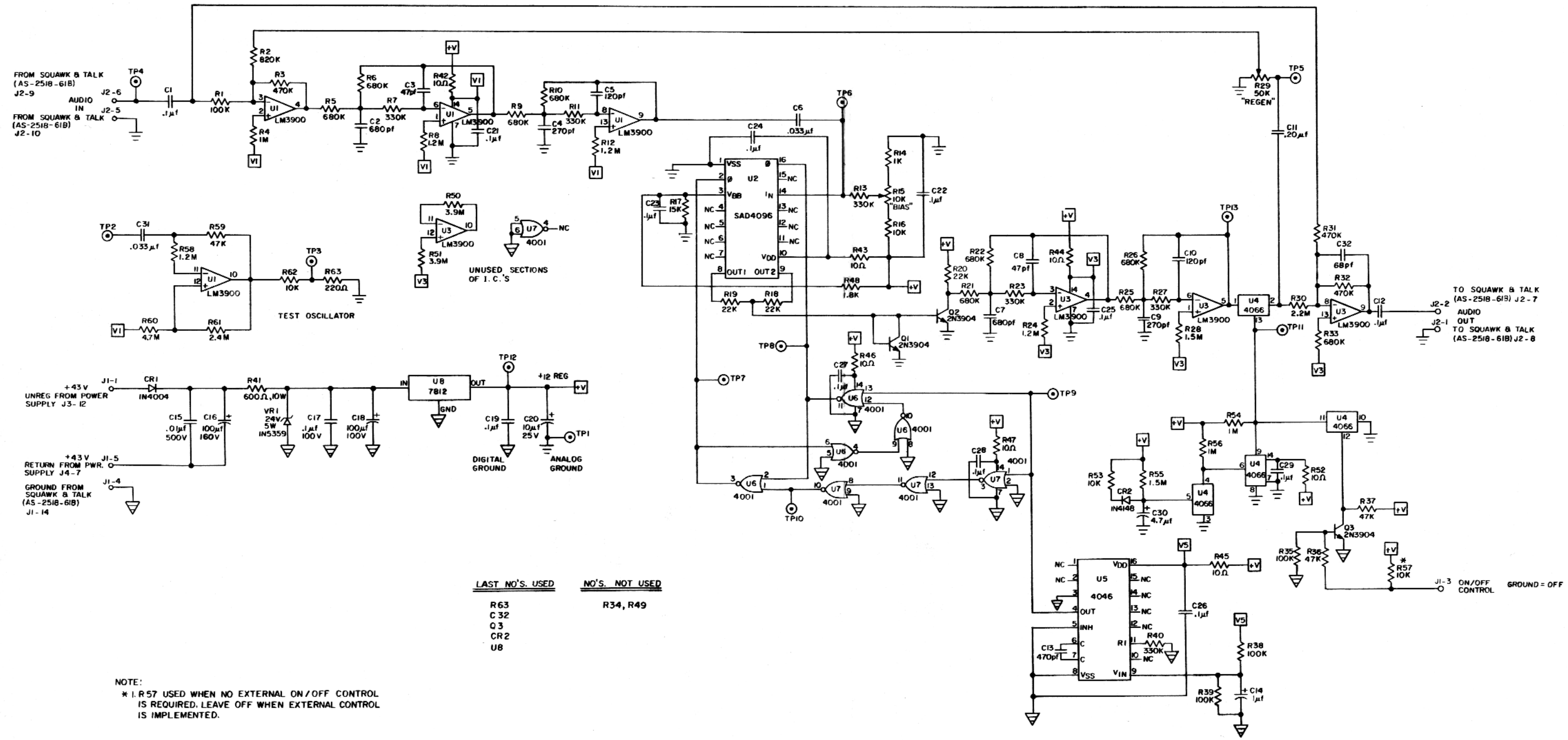

LAST NO'S. USED	NO'S. NOT USED
R63	R34, R49
C32	
Q3	
CR2	
U8	

NOTE:

* 1. R57 USED WHEN NO EXTERNAL ON/OFF CONTROL IS REQUIRED. LEAVE OFF WHEN EXTERNAL CONTROL IS IMPLEMENTED.

ALL DESIGN, OPERATIVE AND PROCESS DATA PERTAINING TO THE ARTICLE SHOWN ON THIS SHEET IS THE PROPERTY OF BALLY MFG. CORP. CHICAGO, ILL. THIS INFORMATION IS DISCLOSED IN CONFIDENCE AND IS NOT TO BE COPIED, REPRODUCED, REVEALED TO OR APPROPRIATED BY OTHERS, IN PART OR IN WHOLE, WITHOUT THE EXPRESS CONSENT OF THE OWNERS. THE PRINT IS LOANED AND MUST NOT BE USED IN ANY MANNER DETRIMENTAL TO THE INTEREST OF THE OWNERS, AND MUST BE RETURNED ON DEMAND.

OPER.	DEPT.	DESCRIPTION	TOOL NO.

NO.	LET.	CHANGE	DATE	BY

REMOVE ALL BURRS
TOLERANCES ON DIMENSIONS UNLESS OTHERWISE SPECIFIED
FRACTIONS ± .008
DECIMALS ± .003
EXCEPT HOLE DIA. ±
ANGLES ± 1/2°
DO NOT SCALE DRAWING

DR. BY FFC	DATE 8-6-81	
CK. BY AMCR	DATE 8-81	
APD BY NE	DATE 8-81	
APD BY	DATE 8-13-81	
FINISH:		
HARDENING:		

Bally MANUFACTURING CORP.
2640 BELMONT AVENUE
CHICAGO, ILLINOIS
1239

PRINT CONTROL	DIE SIZE-	C.C.-	FT. PER M-	LBS. PER M-

NAME: SAY IT AGAIN (SCHEMATIC)
ASSEM. NO. USED: AS-2518-81
SCALE: ∅
MATERIAL
CODE
PART NO. W-1258c

PART NO. W-1255-2 b

72	A9J3-18	
N/U	A9J3-17	
56	A9J3-16	
14	A9J3-15	
27	A9J2-12	LEFT THUMPER BUMPER
96	A9J2-17	#4 CHAMBER (2) (TOP)
21	A9J3-12	
70	A9J3-11	
54	A9J2-7	TOP LEFT LANE
53	A9J3-9	
13	A9J3-8	
82	A9J2-19	RIGHT THUMPER BUMPER
N/U	A9J3-6	
N/U	A9J3-5	
95	A9J2-20	#3 CHAMBER (2)
20	A9J3-3	
57	A9J2 18	
43	A9J2-1	TOP MIDDLE LANE
N/U	A9J2-16	
52	A9J2-15	
12	A9J2-14	
40	A9J2-2	LEFT SLING SHOT
62	A9J2-3	#2 CHAMBER (2)
18	A9J2-11	
80	A9J2-10	
25	A9J2-18	TOP RIGHT LANE
51	A9J2-8	
10	A9J2-7	
45	A9J2-6	RIGHT SLING SHOT
60	A9J2-5	#1 CHAMBER (2)(FROM BOTTOM)
15	A9J2-4	
20	A2J1-5	5.4 VDC

TO W-1207-11

ALL DESIGN, OPERATIVE AND PROCESS DATA PERTAINING TO THE ARTICLE SHOWN ON THIS SHEET IS THE PROPERTY OF BALLY MFG. CORP. CHICAGO, ILL. THIS INFORMATION IS DISCLOSED IN CONFIDENCE AND IS NOT TO BE COPIED, REPRODUCED, REVEALED TO OR APPROPRIATED BY OTHERS, IN PART OR IN WHOLE, WITHOUT THE EXPRESS CONSENT OF THE OWNERS. THE PRINT IS LOANED AND MUST NOT BE USED IN ANY MANNER DETRIMENTAL TO THE INTEREST OF THE OWNERS, AND MUST BE RETURNED ON DEMAND.

OPER.	DEPT.	DESCRIPTION	TOOL NO.

NO.	LET.	CHANGE	DATE	BY

REMOVE ALL BURRS
TOLERANCES ON DIMENSIONS UNLESS OTHERWISE SPECIFIED
FRACTIONS ± .008
DECIMALS ± .003
EXCEPT HOLE DIA.'S
ANGLES ± 1/2°
DO NOT SCALE DRAWING

DR. BY | DATE
CK. BY | DATE
AP'D BY JD | DATE 7-22-81
AP'D BY | DATE 7-22-81
FINISH:
HARDENING:

Bally MANUFACTURING CORP.
2640 BELMONT AVENUE
CHICAGO, ILLINOIS
1239

PRINT CONTROL | DIE SIZE- | C.C.- | FT. PER M- | LBS. PER M-

NAME WIRING DIAGRAM PLAYFIELD | ASSEM. NO. USED | SCALE

MATERIAL CODE CENTAUR | PART NO. W-1255-2 b

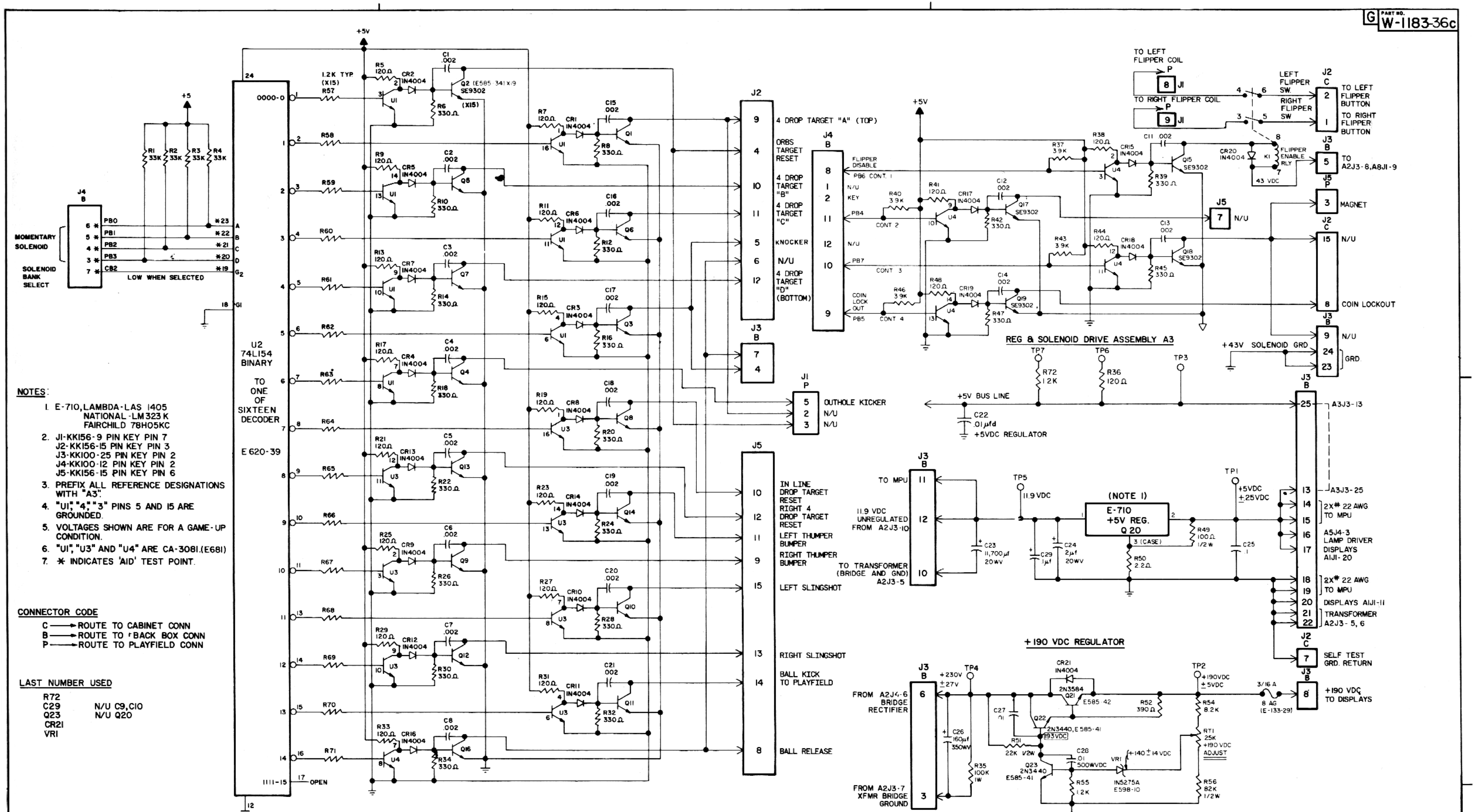

NOTES:

1. E-710, LAMBDA-LAS 1405
   NATIONAL-LM323K
   FAIRCHILD 78H05KC
2. J1-KK156-9 PIN KEY PIN 7
   J2-KK156-15 PIN KEY PIN 3
   J3-KK100-25 PIN KEY PIN 2
   J4-KK100-12 PIN KEY PIN 2
   J5-KK156-15 PIN KEY PIN 6
3. PREFIX ALL REFERENCE DESIGNATIONS WITH "A3".
4. "U1", "4", "3" PINS 5 AND 15 ARE GROUNDED.
5. VOLTAGES SHOWN ARE FOR A GAME-UP CONDITION.
6. "U1", "U3" AND "U4" ARE CA-3081.(E681)
7. * INDICATES 'AID' TEST POINT.

CONNECTOR CODE

C → ROUTE TO CABINET CONN
B → ROUTE TO BACK BOX CONN
P → ROUTE TO PLAYFIELD CONN

LAST NUMBER USED

R72
C29
Q23 N/U C9, C10
CR21 N/U Q20
VR1

ALL DESIGN OPERATIVE AND PROCESS DATA PERTAINING TO THE ARTICLE SHOWN ON THIS SHEET IS THE PROPERTY OF BALLY MFG CORP CHICAGO. ALL THIS INFORMATION IS DISCLOSED IN CONFIDENCE AND IS NOT TO BE COPIED REPRODUCED REVEALED TO OR APPROPRIATED BY OTHERS IN PART OR IN WHOLE WITHOUT THE EXPRESS CONSENT OF THE OWNERS. THE PRINT IS LOANED AND MUST NOT BE USED IN ANY MANNER DETRIMENTAL TO THE INTERESTS OF THE OWNERS AND MUST BE RETURNED ON DEMAND

NO.	LET.	CHANGE	DATE	BY

REMOVE ALL BURRS
TOLERANCES ON DIMENSIONS UNLESS OTHERWISE SPECIFIED
FRACTIONS ± .008
DECIMALS ± .003
EXCEPT HOLE DIA ±
ANGLES ± 1/2°
DO NOT SCALE DRAWING

DR. BY J.G.	DATE 6-22-81	
CK. BY	DATE 6-22-81	
APD BY	DATE	
APD BY	DATE	
FINISH:		
HARDENING:		

Bally MANUFACTURING CORP. #1239
2640 BELMONT AVENUE
CHICAGO, ILLINOIS

PRINT CONTROL | DIE SIZE: | C.C.: | FT PER M: | LBS. PER M:

NAME: SOLENOID DRIVER VOLTAGE REGULATOR SCHEMATIC
ASSEM NO USED | SCALE
MATERIAL CODE: CENTAUR
PART NO: W-1183-36c

OPER.	DEPT.	DESCRIPTION	TOOL NO.

PART NO. W-1184-2c

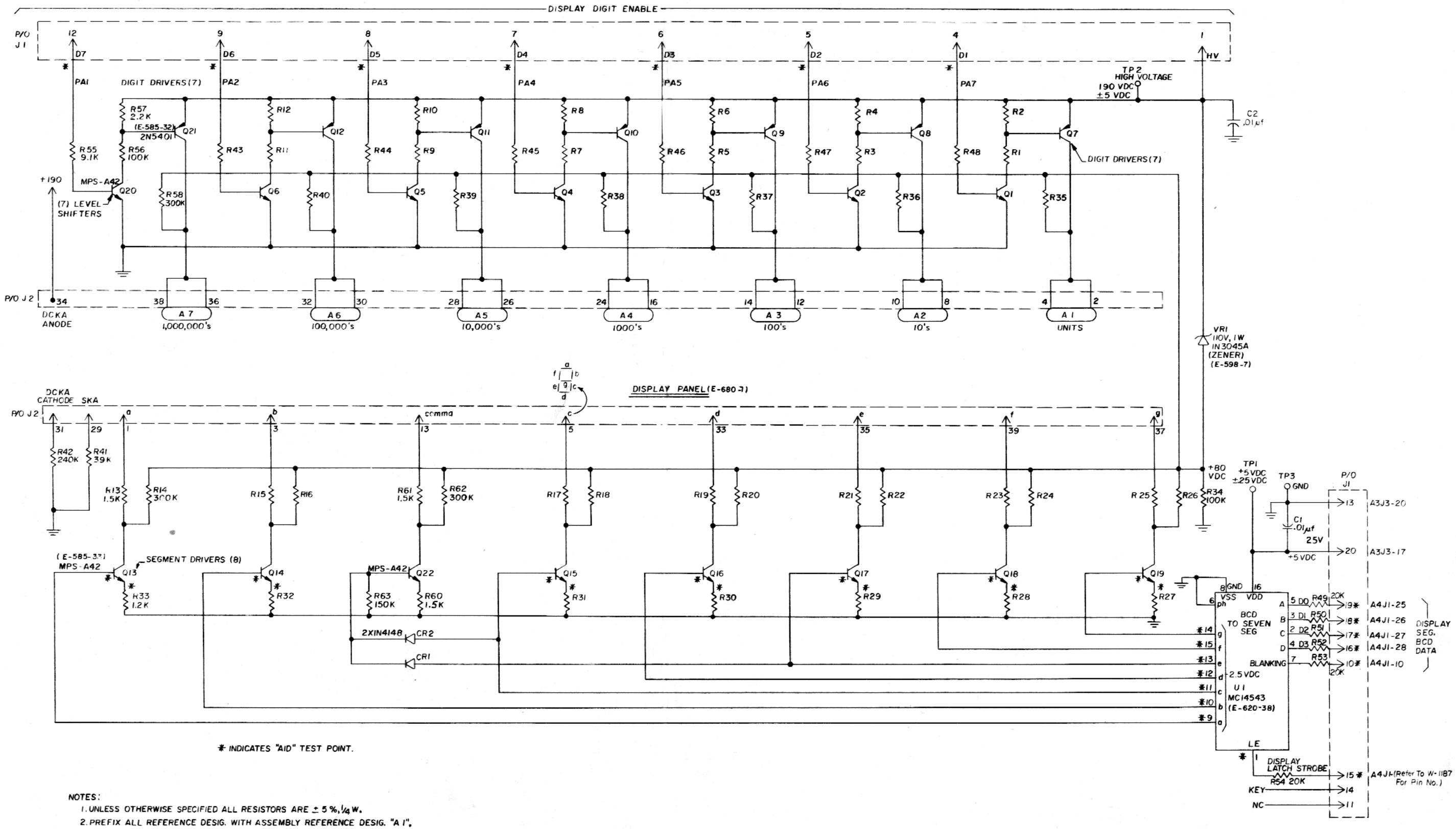

* INDICATES "AID" TEST POINT.

NOTES:

1. UNLESS OTHERWISE SPECIFIED ALL RESISTORS ARE ± 5%, 1/4 W.
2. PREFIX ALL REFERENCE DESIG. WITH ASSEMBLY REFERENCE DESIG. "A 1".

ALL DESIGN, OPERATIVE AND PROCESS DATA PERTAINING TO THE ARTICLE SHOWN ON THIS SHEET IS THE PROPERTY OF BALLY MFG. CORP. CHICAGO. ALL THIS INFORMATION IS DISCLOSED IN CONFIDENCE AND IS NOT TO BE COPIED, REPRODUCED, REVEALED, TO OR APPROPRIATED BY OTHERS, IN PART OR IN WHOLE, WITHOUT THE EXPRESS CONSENT OF THE OWNERS. THE PRINT IS LOANED AND MUST NOT BE USED IN ANY MANNER DETRIMENTAL TO THE INTEREST OF THE OWNERS, AND MUST BE RETURNED ON DEMAND.

NO.	LET.	CHANGE	DATE	BY

REMOVE ALL BURRS

TOLERANCES ON DIMENSIONS UNLESS OTHERWISE SPECIFIED
FRACTIONS ± .008
DECIMALS ± .003
EXCEPT HOLE DIA ± .5
ANGLES ± 1/2°

DO NOT SCALE DRAWING

DR. BY FFC	DATE 6-18-0		
CK. BY	DATE		
AP'D BY	DATE		
AP'D BY	DATE		
FINISH:			
HARDENING:			

Bally MANUFACTURING CORP.
2640 BELMONT AVENUE
CHICAGO, ILLINOIS

#1210

PRINT CONTROL | DIE SIZE- | C.C.- | FT. PER M- | LBS. PER M-

NAME: 7 DIGIT DISPLAY BOARD SCHEMATIC "A1"

ASSEM. NO. USED: AS-2518-58

SCALE: ~

MATERIAL

CODE

PART NO. W-1184-2c

OPER.	DEPT.	DESCRIPTION	TOOL NO.

PART NO. W-1251 b

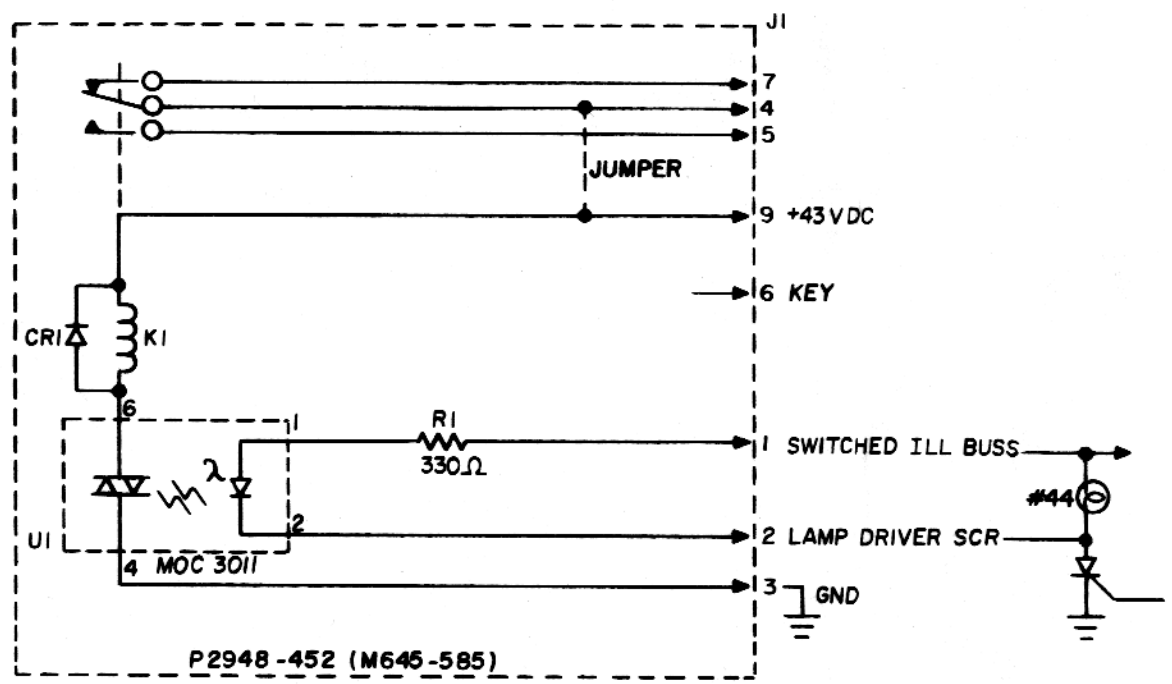

ALL DESIGN, OPERATIVE AND PROCESS DATA PERTAINING TO THE ARTICLE SHOWN ON THIS SHEET IS THE PROPERTY OF BALLY MFG. CORP., CHICAGO, ILL. THIS INFORMATION IS DISCLOSED IN CONFIDENCE AND IS NOT TO BE COPIED, REPRODUCED, REVEALED TO OR APPROPRIATED BY OTHERS, IN PART OR IN WHOLE, WITHOUT THE EXPRESS CONSENT OF THE OWNERS. THE PRINT IS LOANED AND MUST NOT BE USED IN ANY MANNER DETRIMENTAL TO THE INTEREST OF THE OWNERS, AND MUST BE RETURNED ON DEMAND.

OPER.	DEPT.	DESCRIPTION	TOOL NO.

NO.	LET.	CHANGE	DATE	BY

REMOVE ALL BURRS

TOLERANCES ON DIMENSIONS UNLESS OTHERWISE SPECIFIED
FRACTIONS ± .008
DECIMALS ± .003
EXCEPT HOLE DIA.'S
ANGLES ± 1/2°

DO NOT SCALE DRAWING

DR. BY FFC	DATE 1-21-81	
CK. BY	DATE	
AP'D BY	DATE 1-23-81	
APP'D BY	DATE 1-23-81	
FINISH:		
HARDENING:		

Bally MANUFACTURING CORP.
2640 BELMONT AVENUE
CHICAGO, ILLINOIS
1220

PRINT CONTROL | DIE SIZE- | C.C.- | FT. PER M- | LBS. PER M-

NAME: SOLENOID EXPANDER (SCHEMATIC)
ASSEM. NO. USED: AS-2518-66
SCALE
MATERIAL
CODE
PART NO. W-1251 b

PART NO. W-1253 b

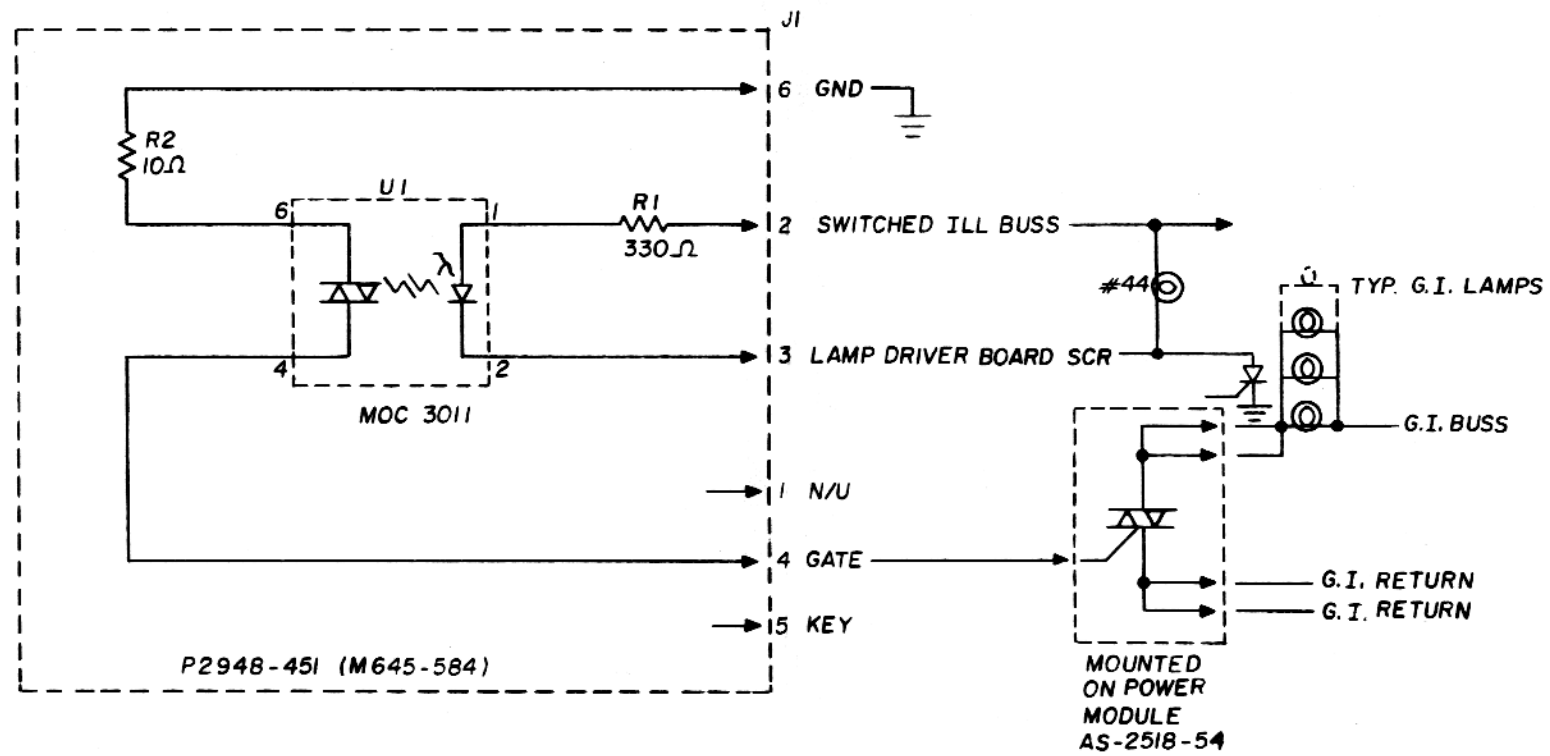

ALL DESIGN, OPERATIVE AND PROCESS DATA PERTAINING TO THE ARTICLE SHOWN ON THIS SHEET IS THE PROPERTY OF BALLY MFG. CORP., CHICAGO, ILL. THIS INFORMATION IS DISCLOSED IN CONFIDENCE AND IS NOT TO BE COPIED, REPRODUCED, REVEALED TO OR APPROPRIATED BY OTHERS, IN PART OR IN WHOLE, WITHOUT THE EXPRESS CONSENT OF THE OWNERS. THE PRINT IS LOANED AND MUST NOT BE USED IN ANY MANNER DETRIMENTAL TO THE INTEREST OF THE OWNERS, AND MUST BE RETURNED ON DEMAND.

OPER.	DEPT.	DESCRIPTION	TOOL NO.

NO.	LET.	CHANGE	DATE	BY

REMOVE ALL BURRS

TOLERANCES ON DIMENSIONS UNLESS OTHERWISE SPECIFIED
FRACTIONS ± .008
DECIMALS ± .003
EXCEPT HOLE DIA. 5
ANGLES ± 1/2°

DO NOT SCALE DRAWING

DR. BY FFC	DATE 1-22-81	Bally MANUFACTURING CORP. 2640 BELMONT AVENUE CHICAGO, ILLINOIS	#1219
CK. BY	DATE		
AP'D BY	DATE 1-23-81	PRINT CONTROL	DIE SIZE- C.C.- FT. PER M- LBS. PER M-
AP'D BY	DATE 1-23-81	NAME GI FLASHER (SCHEMATIC)	ASSEM. NO. USED AS-2518-68 / SCALE —
FINISH: —		MATERIAL —	PART NO. W-1253 b
HARDENING: —		CODE —	

W-1181-3c

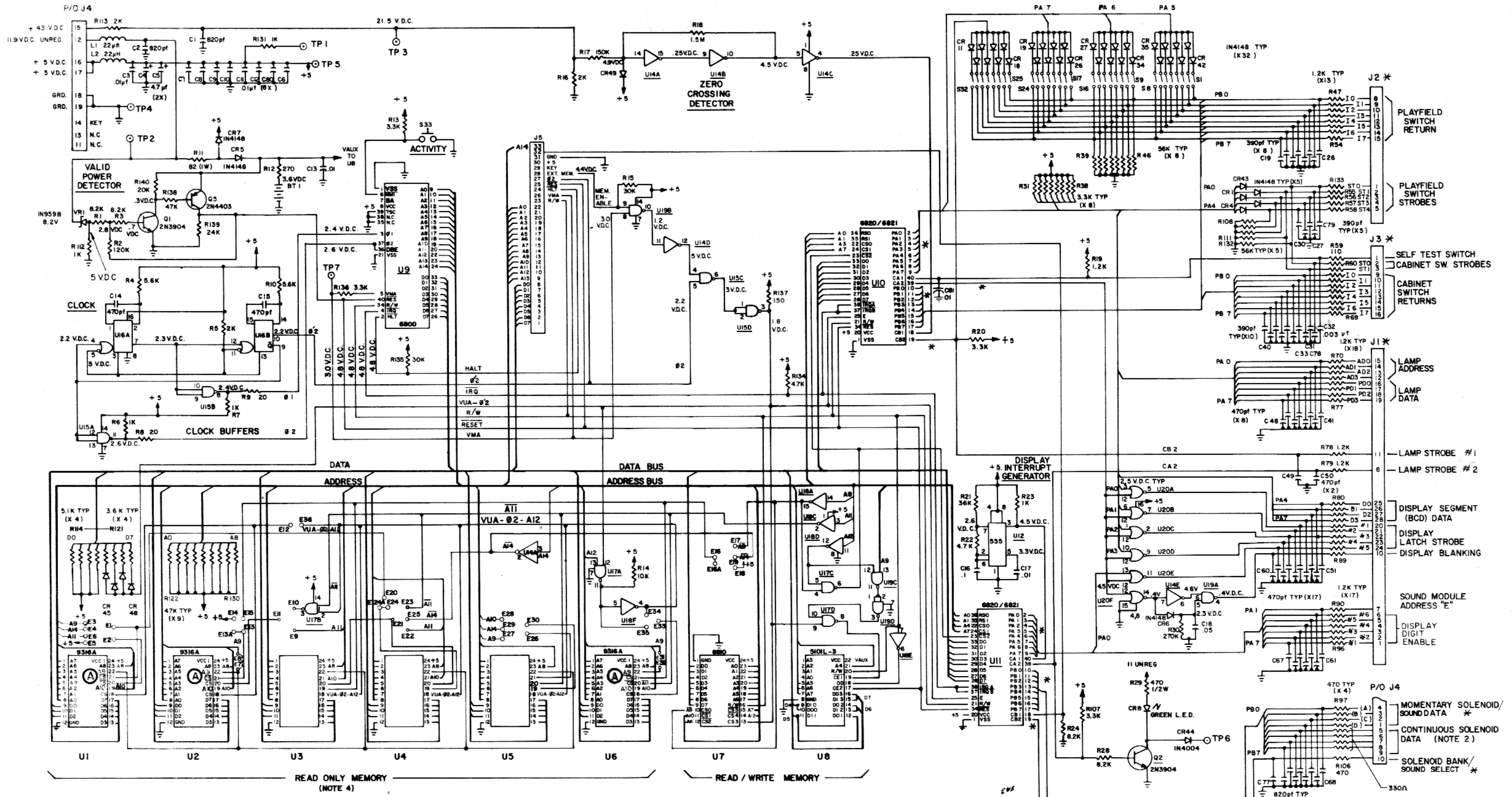

NOTES

1. ✳ INDICATES "AID" TEST POINT.
2. REMOVE A3J4 BEFORE USING AS AID TEST POINT
3. PREFIX ALL REFERENCE DESIGNATIONS WITH "A4"
4. EXACT CHIP COMPLEMENT USED IN SOCKETS U1 THRU U6 CAN VARY FOR DIFFERENT GAMES AND PRODUCTION LOTS. TABLES OF MEMORY CHIPS AND CORRESPONDING JUMPERS FOR DIFFERENT GAMES AVAILABLE FROM BALLY FIELD SERVICE DEPARTMENT.

No.	LET.	CHANGE	DATE	BY	CK
1	A	A9 was VCC2 on U1, U2, U6; A10 was CS	12-78	S.J.	

REMOVE ALL BURRS

TOLERANCES ON DIMENSIONS UNLESS OTHERWISE SPECIFIED
FRACTIONS ± 1/64
DECIMALS ± .005
ANGLES ± 1°

DO NOT SCALE DRAWING

DR BY E.V. DATE 5-11-78
CK BY E.V. DATE 5-15-78
APP'D BY DATE
APP'D BY DATE
FINISH:
HARDENING:

ALL DESIGN, OPERATIVE AND PROCESS DATA PERTAINING TO THE ARTICLE SHOWN ON THIS SHEET IS THE PROPERTY OF BALLY MFG. CORP. CHICAGO, ILL. THIS INFORMATION IS DISCLOSED IN CONFIDENCE AND IS NOT TO BE COPIED, REPRODUCED, REVEALED TO OR APPROPRIATED BY OTHERS, IN PART OR IN WHOLE WITHOUT THE EXPRESS CONSENT OF THE OWNERS. THE PRINT IS LOANED AND MUST NOT BE USED IN ANY MANNER DETRIMENTAL TO THE INTEREST OF THE OWNERS, AND MUST BE RETURNED ON DEMAND.

Bally MANUFACTURING CORP.
2640 BELMONT AVENUE
CHICAGO, ILLINOIS

1119-E

PRINT CONTROL										TOTAL	SCALE

NAME: M.P.U. CONTROL BOARD SCHEMATIC

ASSEM NO USED ON

MATERIAL

PART NO. W-1181-3c

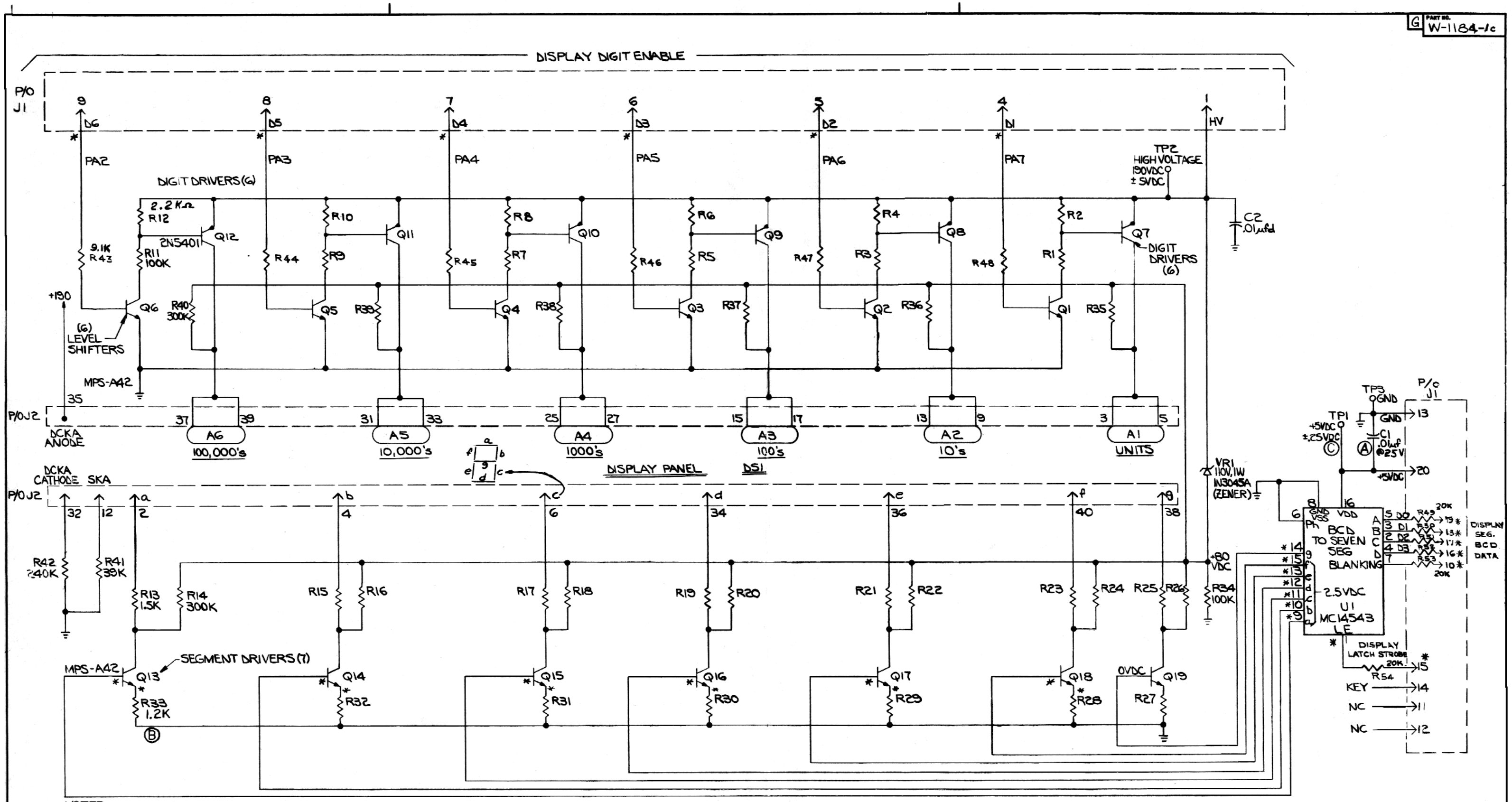

NOTES:

1. UNLESS OTHERWISE SPECIFIED ALL RESISTORS ARE ± 5%, 1/4W.
2. PREFIX ALL REFERENCE DESIG. WITH ASSEMBLY REFERENCE DESIG. "A1"
3. * INDICATES 'A1D' TEST POINT.

OPER.	DEPT.	DESCRIPTION	TOOL No.

NO.	LET.	CHANGE	DATE	BY	CK.
3	C	WAS VAC	6-20-80		J.D.
2	B	WAS 1K	3-28-80		J.D.
1	A	WAS 500V	4-16-79		J.D.

REMOVE ALL BURRS

TOLERANCES ON DIMENSIONS UNLESS OTHERWISE SPECIFIED
FRACTIONS ±
DECIMALS ±
ANGLES ±

DO NOT SCALE DRAWING

DIE SIZE — C.C. — FT. PER M — LBS. PER M —

ALL DESIGN, OPERATIVE AND PROCESS DATA PERTAINING TO THE ARTICLE SHOWN ON THIS SHEET IS THE PROPERTY OF BALLY MFG. CORP., CHICAGO, ILL. THIS INFORMATION IS DISCLOSED IN CONFIDENCE AND IS NOT TO BE COPIED, REPRODUCED, REVEALED TO OR APPROPRIATED BY OTHERS, IN PART OR IN WHOLE, WITHOUT THE EXPRESS CONSENT OF THE OWNERS. THE PRINT IS LOANED AND MUST NOT BE USED IN ANY MANNER DETRIMENTAL TO THE INTEREST OF THE OWNERS, AND MUST BE RETURNED ON DEMAND.

DR. BY D.G. DATE 7-27-77
CK. BY DATE 7-8-77
APP. BY DATE 10/19/77
APP. BY DATE 10/19/77
FINISH: N
HARDWARE: N

Bally MANUFACTURING CORP. #1120-E
2640 BELMONT AVENUE
CHICAGO, ILLINOIS
NOV 1 8 1977
FILE N_VEETIES

PRINT CONTROL → PROD. | PUR. | PUR. DEPT. | ENG. | TOOL DESIG. | CONT. | INS. | TOOL | MAINT. | TOTAL | SCALE N

NAME 6 DIGIT DISPLAY BOARD SCHEMATIC "A1"
MATERIAL
ASSEM. NO. USED ON/W AS-2518-21
PART NO. W-1184-1c

PART NO. W-1184-1c

PART NO. W-1233 b

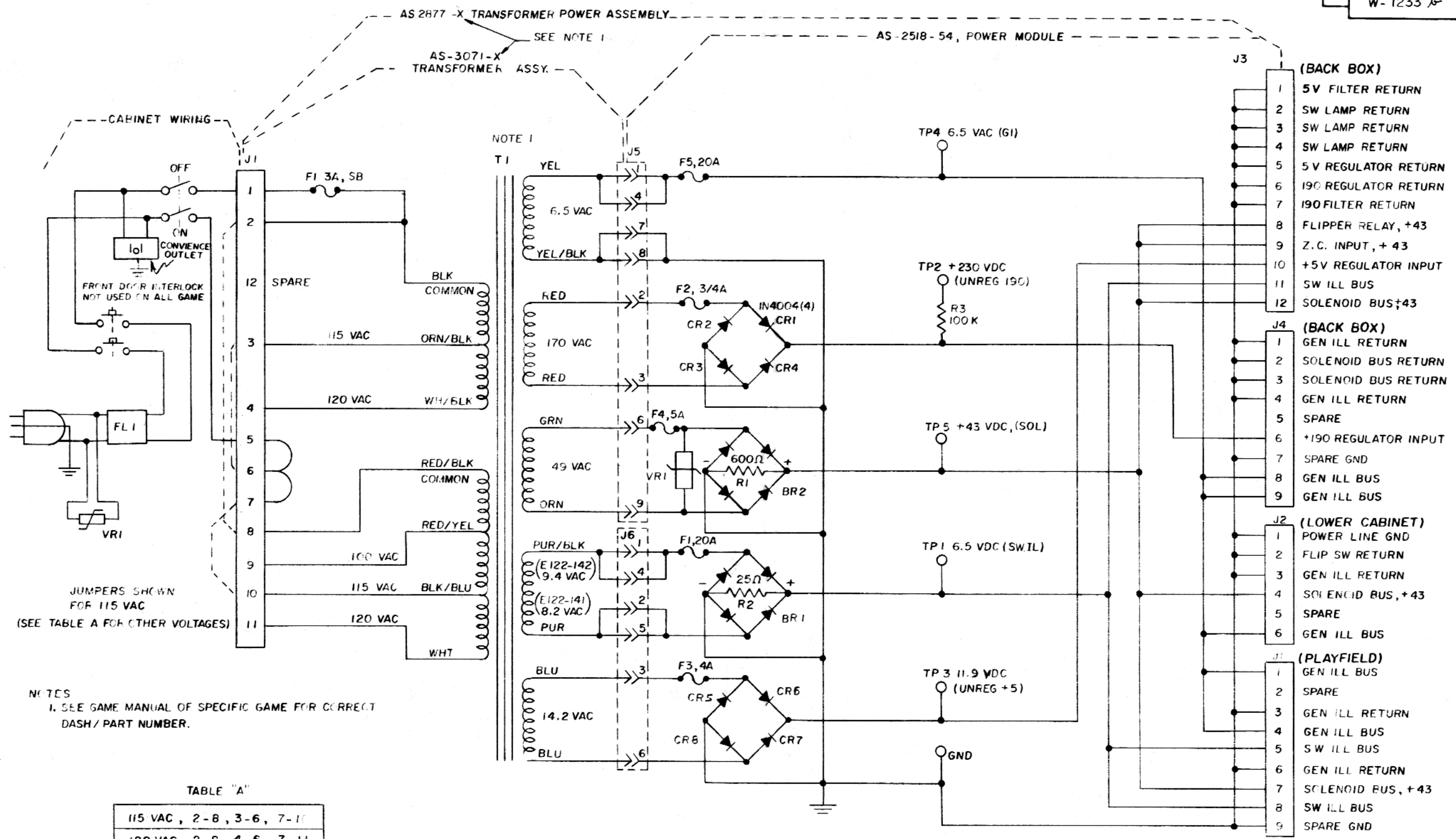

NOTES
1. SEE GAME MANUAL OF SPECIFIC GAME FOR CORRECT DASH/PART NUMBER.

TABLE "A"

115 VAC, 2-8, 3-6, 7-10
120 VAC, 2-8, 4-6, 7-11
220 VAC, 4-8, 7-9
240 VAC, 4-8, 7-11

ALL DESIGN, OPERATIVE AND PROCESS DATA PERTAINING TO THE ARTICLE SHOWN ON THIS SHEET IS THE PROPERTY OF BALLY MFG. CORP., CHICAGO, ILL. THIS INFORMATION IS DISCLOSED IN CONFIDENCE AND IS NOT TO BE COPIED, REPRODUCED, REVEALED TO OR APPROPRIATED BY OTHERS, IN PART OR IN WHOLE, WITHOUT THE EXPRESS CONSENT OF THE OWNERS. THE PRINT IS LOANED AND MUST NOT BE USED IN ANY MANNER DETRIMENTAL TO THE INTEREST OF THE OWNERS, AND MUST BE RETURNED ON DEMAND.

OPER.	DEPT.	DESCRIPTION	TOOL NO.

NO.	LET.	CHANGE	DATE	BY

REMOVE ALL BURRS

TOLERANCES ON DIMENSIONS UNLESS OTHERWISE SPECIFIED
FRACTIONS ± .008
DECIMALS ± .003
EXCEPT HOLE DIA.'S
ANGLES ± 1/2°

DO NOT SCALE DRAWING

DR. BY FFC	DATE 7-10-80	Bally MANUFACTURING CORP. 2640 BELMONT AVENUE CHICAGO, ILLINOIS	# 1196
CK. BY AMCR	DATE 7-11-80		
AP'D BY	DATE	PRINT CONTROL / DIE SIZE- / C.C.- / FT. PER M- / LBS. PER M-	
AP'D BY	DATE 7-11-80	NAME: POWER SUPPLY SCHEMATIC	ASSEM. NO. USED / SCALE
FINISH:		MATERIAL / CODE	PART NO. W-1233 b
HARDENING:			

THIS PAGE
INTENTIONALLY
LEFT BLANK