ISSUE	CHANGE	DATE

12D-521-S

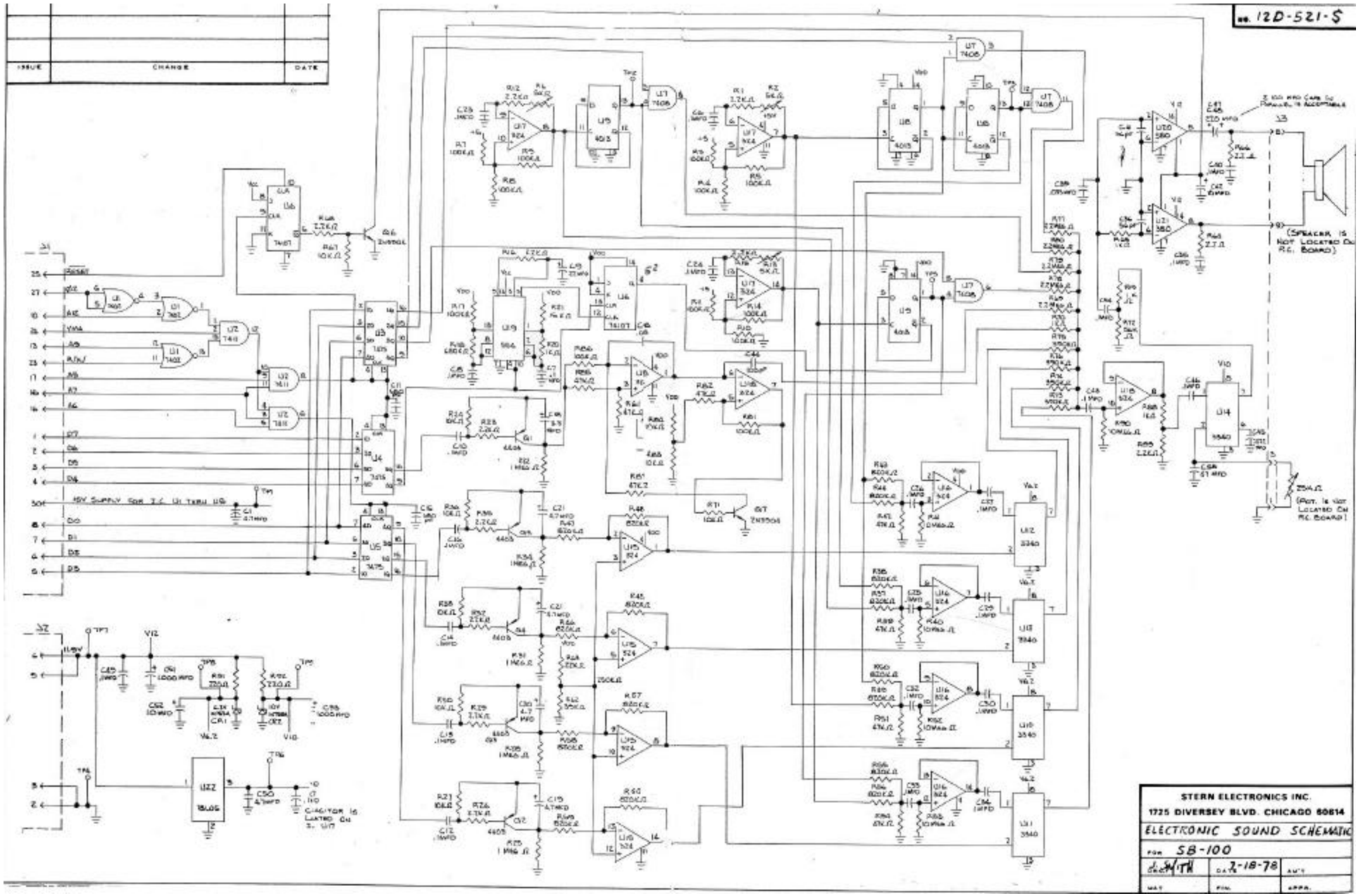

STERN ELECTRONICS INC.
1725 DIVERSEY BLVD. CHICAGO 60614

ELECTRONIC SOUND SCHEMATIC

FOR SB-100

DRAWN	DATE	APP'D
J.S.W.T.R.	2-18-78	
MAT	FIN	APPR.